WHAT YOU DO IS VERY IMPORTANT!

The information on the registration is used for:

A. Customer Service:

- A mail renewal registration form is mailed to customers each year. The renewal information is derived from the vendor registration forms, transactions processed at the county motor vehicle offices, and internet registrations. The Idaho Department of Parks and Recreation (IDPR) Registration Unit must key the information from the vendor registration forms into a data base. Because the information is keyed into the database, it is very important the forms be legible, accurate and complete.
- Using the pre-printed mail renewal form whenever the customer provides one will make the registration process quicker and easier for everyone.
- The customer will keep a copy of the registration as supporting documentation for law enforcement. The registration form must be legible, accurate and complete so the officer may read it.

B. Law Enforcement:

- Registration information is fed into the Idaho law enforcement communication system sometimes called ILETS or IPSSIS.
- Law Enforcement officials may access the RIS information to identify a machine that has been stolen, in an accident or found in a remote location. If law enforcement comes across an abandoned machine, having a legible, accurate and complete registration will help to identify the owner.

C. Idaho Department of Parks & Recreation:

IDPR uses the information from the registrations to distribute user fees, send out mail renewal notices, and make important decisions about recreational resources.

Contact Numbers:

Registration Section - For questions or sticker orders please call IDPR at **1-800-247-6332**.

EXPECTATIONS OF A VENDOR

It is very important that vendors follow the procedures for registrations, reports and payments. This will allow IDPR and the vendor to provide quality customer service. Failure to comply with procedures may result in suspension or termination as an IDPR Recreational Registration Vendor.

Completing the Recreation Registration Form:

- The registration form must be legible, accurate and complete.
- A transmittal must be submitted by the 15th of each month with the appropriate payment, and IDPR's copy of the registration forms.
- The registrations and stickers must be kept in a safe and secure place.
- The vendor must be accountable for all stickers, sold or unsold.

Processing Registrations

A. Ownership

Vendors must take reasonable care that adequate evidence of ownership is presented prior to issuing new registrations. Prior registration, title, or a bill of sale is sufficient evidence. Please attach the bill of sale or other proof of ownership to the registration copies you send back to IDPR.

B. Time Frames

Snowmobile Registrations-November 1st, 2012 – October 31, 2013

Winter Recreation Permits- November 15th, 2012 - April 15th, 2013

Off-Highway Vehicle Registrations (motorbike, ATV, UTV, SOHV) - January 1st, 2013 – December 31st, 2013.

Boat and Invasive Species- January 1st, 2013- December 2013

Reduced fees for new Idaho boat registrations begin April 1st. Should a customer register a brand new boat or an older boat that has never been registered in Idaho, the fees are reduced after certain times of the year. See the "Boat" section of this manual for the further details. *Please note a boat may only be prorated once in its lifetime.

C. Mail Renewal Notices

In September a snowmobile renewal notice is mailed to Idaho residents with a current registration and an Idaho mailing address. Renewals are not mailed to snowmobile non-resident recreationists, snowmobile rental owners, or winter recreation parking permit holders. A renewal notice is mailed in November to boating and OHV motorbike/ATV/UTV/SOHV registered owners. ***In order for the customer to receive his or her mail renewal, the current registration and mailing address must be correct.*** Mail renewals

are not mailed to non-resident snowmobile recreationists, snowmobile rental owners, winter recreation parking permit holders.

D. Vendor Packets

Vendor packets are sent out at the beginning of each season. Each packet includes vendor manuals, stickers, posters, maps and forms.

Vendor Manuals

The Idaho Department of Parks and Recreation Recreational Registration Vendor Manual has been reorganized this year. The manual contains instructions and samples to help the vendor correctly complete the registrations and collect the appropriate fees.

Stickers

The vendor should compare the registration stickers with the issue sheet as soon as stickers are received. Please notify the IDPR Registration Section within one week if there is a discrepancy. This will be the only opportunity for a vendor to report missing stickers without paying for them.

Vendors should check their sticker inventory often, especially before holidays, to make sure you do not run out. **Obtaining stickers from another vendor is not permitted.** The stickers IDPR sends to you are assigned only to you.

At the end of the season, a "wrap-up" form will be mailed to each vendor. Vendors are required to return all unsold stickers. If stickers are not sold, not returned or were not reported as missing when received, the vendor must pay the appropriate fees.

Posters and Maps

Designation maps are included in the vendor manual this year. Please review the maps and posters for any changes from the prior sticker year. Display the posters where they will be visible to registration customers.

Supplies

If more stickers or forms are needed, please contact the IDPR Registration Section at: 1-208-334-4197 or 1-800-247-6332 or e-mail reghelpline@idpr.idaho.gov

E. Completing the registration and transmittal forms

Print Clearly

Please print clearly! The registration is an official document that IDPR staff and law enforcement must be able to read.

Complete All Information Accurately

The registration form must have every box checked and every line filled in. Be sure to enter the customer's actual name. Remember, this is an official document and nicknames are not acceptable. Ask the customer for their mailing address to ensure the mail renewal, or any other correspondence is sent to the correct address. The telephone number and email will assist us in contacting the customer for clarification. IDPR does not share personal information. Complete all other information as noted in the appropriate vendor manual section.

F. Reporting Requirements

Each vendor must send a transmittal report to IDPR by the 15th of each month. The report will summarize, in numerical order, all registrations sold or voided. A single check for registration fees and IDPR's copies of registration forms are to be included with the transmittal report.

If no sales occur during the month, send a "NO SALES CARD." Vendors are required to submit a "No Sales card" for the registration stickers they sell. For example, if a vendor only sells snowmobile stickers then the only "No Sale Card" they would complete is for snowmobile.

The Delinquent Vendor Report will be monitored monthly to ensure reporting is timely and accurate.

G. Refunds and Replacements

Please refer any requests for refunds or replacements free of charge to the IDPR Registration Section at 800-247-6332. IDPR will determine if a refund is needed or replace the sticker if appropriate. Duplicate and replacement stickers may be sold as noted in the following sections.

H. "Wrap-Up" Form

At the end of each season a "wrap up" form will be mailed to the vendors. The form will be sent in April for Park N' Ski stickers, September for Snowmobile stickers and December for the boat and off-highway motorbike/ATV/UTV/SOHV stickers. Once the vendor receives the "wrap up" form, please take action on the following items:

- Complete the wrap-up form
- Prepare the final transmittal for all 2013 sticker sales
- Issue a check to IDPR for all registration fees collected
- Forward all the completed items listed to IDPR attention Registration.

SNOWMOBILE REGISTRATION REQUIREMENTS

General Requirements

On or before November 1 of each year, the owner of each snowmobile must register the snowmobile with the Idaho Department of Parks & Recreation (IDPR). IDPR or its authorized vendor(s) will issue the owner a registration. The registration fee is $32.50 for resident machines, $62.50 for rental machines (a $1.50 vendor fee is included in those figures). This includes a $1.00 for snowmobile related search and rescue efforts. The owner has the opportunity to designate their registration fees to the county snowmobile program of their choosing. IDPR sends 85% of the registration fees to that county (up to 15% of the registration fee may be used for administrative costs). All registrations are valid from November 1 to October 31 of the following year.

Snowmobile Dealers

Each snowmobile must be registered before it leaves the premises at the time of sale from any snowmobile dealer according to section 67-103, Idaho Code. The purchaser of a used snowmobile, which has been previously registered, must transfer the registration within 15 days of the sale. IDPR or its vendor(s) will prepare a new registration with the purchaser's name and address. The transfer fee is $4.50. Applications for an Idaho title must be filed at the nearest county assessor's office.

Nonresident Snowmobile Fees

Idaho requires all out-of-state snowmobilers to purchase a nonresident snowmobile user certificate (NRC). The certificate costs $32.50 (including the vendor fee) and is available at any authorized snowmobile registration vendor(s). Nonresidents may designate their certificate to the county snowmobile program of their primary use. The certificate is good from Nov. 1st to Oct. 31st of the next year. Short term certificates are not available.

County Snowmobile and State Snowmobile Accounts

Each county with a snowmobile program is entitled to 85% of the registration fees designated for that county during the registration period. The money may only be used for county snowmobile programs. The monies are used for the maintenance and operation of snowmobile trail groomers, signing of snowmobile trails, plowing parking lots, and maintaining warming shelters. Up to 15% of the state snowmobile account generated each year may be used by IDPR for administrative costs, such as the cost of the sticker and mailing renewal notices.

Titling Requirements

Idaho Titles are required for new snowmobiles and for change of ownership on used snowmobiles. If the customer purchased the snowmobile before 1/1/1991, they are strongly encouraged to title it, but not required to do so. A customer may apply for title at their local Motor Vehicle Department. The new owner will need to take any available ownership documents including a signed title from the seller, manufacturer's certificate of origin, prior registration, or bill of sale. Applicable sales tax will also be due. A VIN inspection may also be required. **Direct any questions concerning this process to your local DMV or to the Idaho Transportation Department.**

MAIL RENEWAL REGISTRATION FORM

(SEE EXAMPLE ON NEXT PAGE)

Vendors are encouraged to use the Renewal Registration forms that were mailed to the customer whenever possible. The printed renewal forms provide the necessary registration information. It also reduces the need for completing a hand-written form.

PART A

Part A has the customer and snowmobile information, a space for the new sticker number and a space for the issue date. If corrections are needed, draw a single line through the information and write the corrections. Please be sure to fill in the **Sticker Number and Issue Date.** If this information is missing, Parks & Recreation has no way to identify what sticker number and issue date was assigned the vehicle. Send Part A to Parks & Recreation with your monthly transmittal. If you want to have a copy for your records you will have to make one before you send the monthly transmittal.

PART B

Make any necessary corrections as noted above and fill in the **Sticker Number and Issue Date** (same as Part A). Fill in the space for the Vendor Number and Your Initials. The registration is only valid if the following items are complete:

- Owner signature
- Issue date and sticker number listed
- Vendor number and initials provided

Part B will be given to the customer as valid registration, Part A will be sent to IDPR with monthly transmittals.

IF A CUSTOMER DOES NOT BRING IN THEIR RENEWAL FORM, YOU CAN CALL US FOR THE INFORMTATION AT 1-800-247-6332 MONDAY THRU FRIDAY 8:00 AM – 5:00 PM MST.

STICKER NUMBER
S2012000001
S13-005432

SNOWMOBILE RECREATIONAL REGISTRATION PART A

(Submit this section with payment)

SLED, JOE R — NAME (LAST, FIRST, M.I.)
1234 — PIN
28 — PRIMARY USE AREA (SEE BACK)

CO-OWNER (LAST, FIRST, M.I.)
2000 — YR.
POLS — MAKE
700RMK — MODEL

123 MOUNTAIN WAY
NOWHERE, ID 83000
MAILING ADDRESS

123456789
SERIAL NUMBER

208-123-4567
PHONE NUMBER
EMAIL ADDRESS

☐ SOLD ☐ DESTROYED

ISSUE DATE 12/8/12

FEES: Registration 31.00
Vendor 1.50
TOTAL $ 32.50
* Includes $1.00 for Search and Rescue

INSTRUCTIONS:
1. Review information on Parts A and B. If ownership has changed, contact your County MVD. An Idaho Title and bill of sale are required.
2. If corrections are necessary, draw a single line through the incorrect information and write in the corrections.
3. Verify your use area selection. Refer to PRIMARY USE AREAS list on back for USE CODES. This designation determines where the registration fees will be sent. The area shown is your last year designation.

▼ DETACH HERE ▼

TO RENEW BY MAIL, send PART A with your check to Department of Parks and Recreation, Registration Section, PO Box 83720, Boise, ID 83720-0065.
TO RENEW ONLINE, go to www.parksandrecreation.idaho.gov click on REGISTRATIONS & PERMITS and use the personal identification number (PIN) identified above.
TO RENEW AT A VENDOR OR COUNTY MVD, take the entire form with you. The vendor can validate the registration form, collect the appropriate fee, and issue your stickers.
If you have any questions about your renewal, please contact the Department of Parks and Recreation, Registration Section at 1-800-247-6332.

▼ DETACH HERE ▼

SNOWMOBILE RECREATIONAL REGISTRATION PART B

S2012000001

SLED, JOE R — NAME (LAST, FIRST, M.I.)
1234
28 — PRIMARY USE AREA (SEE BACK)

CO-OWNER (LAST, FIRST, M.I.)
2000 — YR.
POLS — MAKE
700RMK — MODEL

123 MOUNTAIN WAY
NOWHERE, ID 83000
MAILING ADDRESS

123456789
SERIAL NUMBER

208-123-4567
PHONE NUMBER
EMAIL ADDRESS

OWNER SIGNATURE Joe Sled

ISSUE DATE 12/8/12 STICKER NUMBER S13-005432

VENDOR NUMBER 14-0123 VENDOR INITIALS HC

FEES: Registration* $ 31.00
Vendor 1.50
TOTAL $ 32.50
* Includes $1.00 for Search and Rescue

Manufactured by Alexander Clark Business Forms - Boise, Idaho - (208) 322-0611

THREE-PART **SNOWMOBILE** REGISTRATION FORM
(Please see examples on page 12 & 13)

ACTION: We encourage vendors to use the renewal notice whenever possible. However, if the customer does not provide one, the three part snowmobile registration form may be used. Please remember the customer will be required to provide proof of ownership such as a title, bill of sale, or a previous registration. If the machine is a renewal and there is no information provided, please call IDPR Registration Unit and we will provide you with the customer information. If the machine is new, proof of ownership will be required in order to register the machine. If the machine has never been registered in Idaho, on the Action portion of the registration, you will mark the "New" box. If the machine has been registered in Idaho previously, you will mark the "Renewal" box on the Action portion.

A **transfer** is required when a snowmobile is registered for the current year, but has been sold and the new owner needs to transfer the registration in their name. A bill of sale or proof of ownership is required. Only the owner information will change. Please mark "transfer" on the Registration form. The new owner may also designate a new use area. The sticker number is the same. **Please do not issue a new set of stickers on a transfer.**

A **replacement** (sometimes called a duplicate) is for a lost or destroyed sticker. Before a new sticker is issued, confirm the machine is registered for the current year. The owner may show the previous year registration or you may call the IDPR Registration Section for confirmation. The "Replacement" box will be marked for this action on the registration form.

Only a government or political subdivision is qualified to receive an **Exempt** registration.

TYPE: Determine if the snowmobile is for the owners' personal use or if the machine will be rented to others. If the snowmobile is for personal use, verify residency. If the owner is NOT an Idaho resident – use the Non-Resident Certificate form (see pages 15 & 16). Mark the appropriate box.

EXPIRATION DATE: 10/31/2013

VALIDATION STICKER #: This is the number on the sticker that you sell to the customer.

VIN: This is the snowmobile's serial number. **IT IS VERY IMPORTANT TO HAVE THIS NUMBER CORRECT.** Please check the snowmobile for accuracy and list the complete number. This number may be used to identify a stolen snowmobile. Emergency Response or Law Enforcement may need this number for identification.

YEAR-MAKE-MODEL-DESCRIPTION: Enter the year, make and model of the snowmobile. This information will add to a full description of this unique machine. These are also very important for ownership identification as well as reporting stolen machine(s) for Law Enforcement.

Idaho Department of Parks and Recreation

RECREATIONAL REGISTRATION

This form must be carried on the off-highway vehicle herein described during operation

ACTION		TYPE
☐ New	☐ Replacement Sticker	☒ Resident Snowmobile
☒ Renewal		☐ Rental Snowmobile
☐ Transfer	☐ Exempt	

10/31/13
Expiration Date

S13-01234
Validation Sticker #

2BPSCH6B38V030005
VIN

Red
Description

2008 BMBR Summit 40A
Year Make Model Use Area Designation

Snowmobiler, Joe S.
Primary Owner Name (Last, First, MI)

(208) 123-4567
Phone #

987 Snow Ln Anywhere ID 83000
Mailing Address City State Zip

Snowmobiler, Jane T
Co-owner Name (Last, First, MI)

( )
Phone #

Joe S. Snowmobiler
Applicant Must Sign To Be Valid

11/19/12
Date of Issue

01-0123
Vendor ID #

JKT
Agent Initials

FEES

Reg. Fee:	$ 31.00
Vendor Fee:	$ 1.50
Total Fee:	$ 32.50

Copy Distribution: WHITE - Owner, CANARY - Parks & Recreation, PINK - Vendor

Idaho Department of Parks and Recreation

RECREATIONAL REGISTRATION

This form must be carried on the off-highway vehicle herein described during operation

ACTION		TYPE
☒ New	☐ Replacement Sticker	☐ Resident Snowmobile
☐ Renewal		☒ Rental Snowmobile
☐ Transfer	☐ Exempt	

10/31/13
Expiration Date

R13-04567
Validation Sticker #

4UF09SNW08B145378
VIN

Green
Description

2009 ARCA 600 28
Year Make Model Use Area Designation

Have Fun Sleds 208.444-0000
Primary Owner Name (Last, First, MI) Phone #

101 Rental St. Someplace ID 83000
Mailing Address City State Zip

( )
Co-owner Name (Last, First, MI) Phone #

Mary Manager
Applicant Must Sign To Be Valid

12/15/12
Date of Issue

28-0000
Vendor ID #

SLT
Agent Initials

FEES

Reg. Fee: $ 61.00

Vendor Fee: $ 1.50

Total Fee: $ 62.50

Copy Distribution: WHITE - Owner, CANARY - Parks & Recreation, PINK - Vendor

USE AREA DESIGNATION: Ask the owners which area they wish to designate their fees. Refer them to the County Snowmobile Program Locations map. Enter the designation number and letter if appropriate. If this is left blank or filled in with a number/letter combination that is not shown on the map, the fees will be considered undesignated.

OWNER NAME, ADDRESS, PHONE NUMBER, CO-OWNER NAME: Please print carefully, last name first, full mailing address, zip code, and phone number. Personal information is used only for official business.

DATE OF ISSUE: The date of the sale.

VENDOR NUMBER: Your assigned number.

AGENT INITIALS: Your initials.

SNOWMOBILE RESIDENT FEE:	$31.00
VENDOR FEE:	1.50
TOTAL FEE:	32.50
SNOWMOBILE RENTAL FEE:	61.00
VENDOR FEE:	1.50
TOTAL FEE:	62.50
TRANSFER FEE:	3.00
VENDOR FEE:	1.50
TOTAL FEE:	4.50
REPLACEMENT FEE:	3.00
VENDOR FEE:	1.50
TOTAL FEE:	4.50
SNOWMOBILE EXEMPT FEE:	0
VENDOR FEE:	0
TOTAL FEE:	0

Give the set of stickers and the white original registration form to the owner. The registration form shall be on the snowmobile and available at all times for inspection. **Send the yellow copy to Parks & Recreation with your monthly transmittal.**

SNOWMOBILE NON-RESIDENT CERTIFICATE

PLEASE ***PRINT CAREFULLY AND CLEARLY***!!
IDPR STAFF MUST BE ABLE TO READ AND ENTER INFORMATION WRITTEN ON THE REGISTRATION TO UPDATE THE DATA BASE.

REGISTRATION TYPE: Verify if the snowmobile owner's residency is outside of Idaho. Use the Non-Resident Certificate form. Customers issued a non-resident certificate will not receive a renewal notice.

EXPIRATION DATE: 10/31/2013

NRC STICKER #: This is the number on the **NRC Sticker** you sell to the customer. Instructions for sticker placement is provided on the back of the sticker.

OWNER NAME, MAILING ADDRESS: Please print carefully, last name first, full **MAILING** address, zip code and phone number. Personal information is used only for official business.

MAKE: Fill in the make of the snowmobile.

USE AREA: Ask the owners which area they wish to designate their fees. Refer them to the County Snowmobile Program Locations map. Enter the designation number and letter if appropriate.

VENDOR NUMBER: Your assigned vendor number.

DATE OF ISSUE: The date of the sale.

NRC FEE:	$31.00
VENDOR FEE:	1.50
TOTAL FEE:	$32.50

Give the set of stickers and the white original registration form to the owner. The registration form shall be on the snowmobile and available at all times for inspection. Send the yellow copy to IDPR with your monthly transmittal.

Idaho Snowmobile Program Locations

Indicate on your registration form the snowmobile grooming program you want your registration money to go.

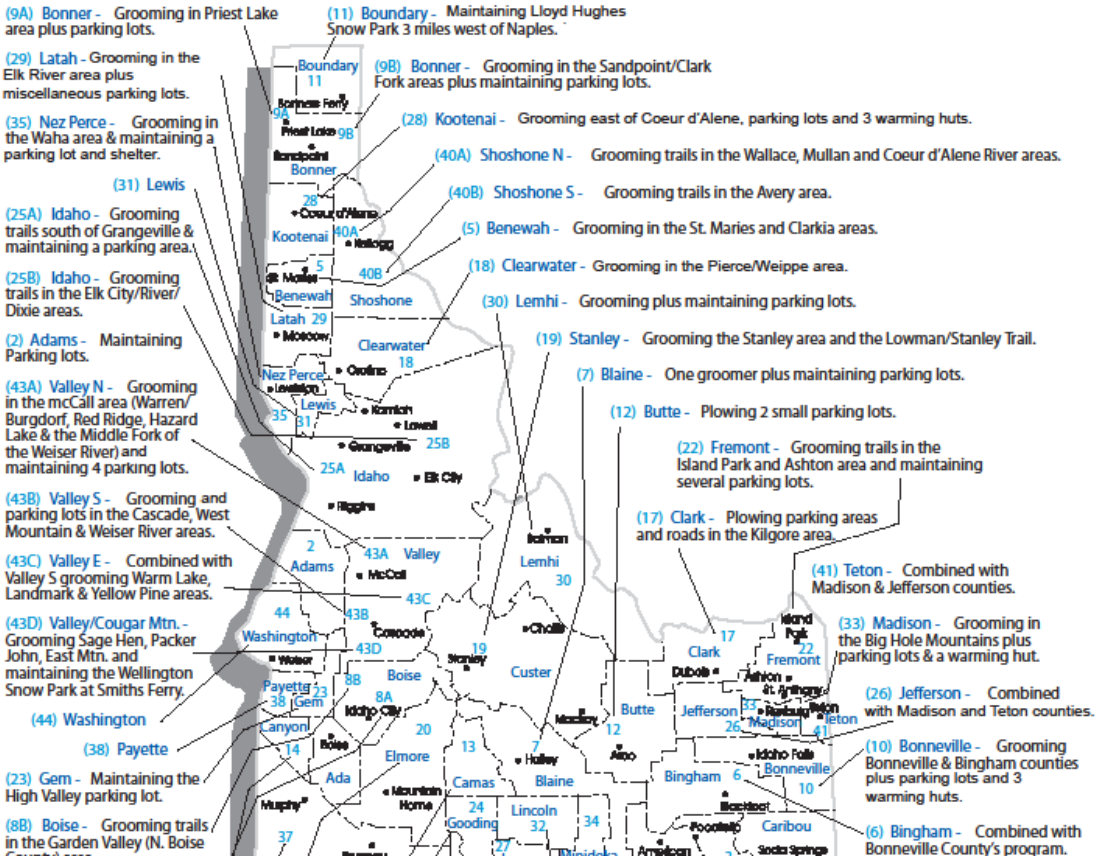

Snowmobile Non Resident Certificate

IDAHO STATE PARKS & RECREATION

Expiration Date 10/31/13

NRC Sticker # N13-1567

Name Montana, Joe, P

Address 987 Wyoming Dr

City Not Idaho State XX ZIP 99999

Phone # (999) 123-4567

Vendor # 04-0321

Date 12/27/12

Make Pols

Use Area 09B

NRC Fee 31.00

Vendor Fee 1.50

Total 32.50

This form must be carried on the off-highway vehicle herein described during operation.

PARK N' SKI REQUIREMENTS

The Park N' Ski 'STICKER' is the Winter Recreation Parking Permit. The sticker allows parking in designated, maintained lots during the winter recreation season, November 15 through April 30.

There are two Park N' Ski permits available. The annual sticker is valid for the entire season while the temporary hang tag is valid for three days as specified at the time of purchase.

The sticker goes on the lower left corner of the windshield. (Instructions are on the back of the sticker).

The temporary hang tag goes on the rear view mirror. (Instructions are on the back of the hang tag).

Be sure to write in the use area designation to ensure the monies are distributed to the proper Park N' Ski area. See the Park N' Ski location map for designation areas.

Transmittals must be completed monthly and are due the 15th of each month. Complete the transmittal, attach the registration forms and send one check for total remittance.

The wrap-up process is the mechanism used by IDPR at the end of the year to reconcile stickers issued to a vendor. The vendor is responsible for the value of all lost stickers.

THREE PART **PARK N' SKI** REGISTRATION FORM

PLEASE ***PRINT CAREFULLY AND CLEARLY!!***
IDPR staff must be able to read and enter information written on the registration form into the RIS data base.

ACTION: Mark the appropriate box. All Temporary Park N' Ski registrations are considered **new**. A **replacement** is for a sticker that has been lost or destroyed. Before **you issue a replacement sticker and registration, please verify the original registration.** The person may show you the registration form or you may call Idaho IDPR and staff will verify if a current year sticker was purchased.

TYPE: Park N' Ski or Temporary Park N' Ski

EXPIRATION DATE: For **Annual** Park N' Ski use 4/30/2013. The **Temporary** permit is valid for 3 consecutive days. The valid dates must be written in permanent marker. (Example, purchased 11/1/12 for a valid permit on 11/15/12 – 11/17/12).

VALIDATION STICKER: This is the number on the sticker or temporary tag you sell to them.

LICENSE PLATE #: The vehicle license plate number.

OWNER NAME, ADDRESS, PHONE NUMBER, CO-OWNER NAME: Please print carefully, last name first, full **MAILING** address with zip code, and phone number with area code. Personal information is used only for official business.

USE AREA DESIGNATION: Ask the owner where they wish to designate their fees. It is his or her choice. See the Park N' Ski Locations map on page 25.

DATE OF ISSUE: The date of the sale.

VENDOR NUMBER: Your assigned number (Example, 01-0213).

AGENT INITIALS: Your initials.

PARK N SKI REGISTRATION FEES

ANNUAL FEE:	$ 24.00
VENDOR FEE:	1.00
TOTAL FEE:	25.00
TEMPORARY FEE:	$ 6.50
VENDOR FEE:	1.00
TOTAL FEE:	7.50
REPLACEMENT FEE:	$ 1.00
VENDOR FEE:	1.00
TOTAL FEE:	2.00

Have the owner sign it, give the sticker or tag and the white original registration form to the owner and you're done.

The sticker goes on the lower left hand corner of the windshield of the car. The instructions are on the back of the sticker.

The temporary permit hang tag must be filled in ‘Valid From’ and ‘Expire’ with a permanent marker. The instructions are on the back of the sticker.

Idaho Department of Parks and Recreation

RECREATIONAL REGISTRATION

This form must be carried on the vehicle herein described during operation

ACTION	TYPE
☒ New ☐ Exempt	☒ Park N' Ski
☐ Renewal	☐ Temporary Park N' Ski
☐ Replacement Sticker	

4/30/13	X13-987
Expiration Date	Validation Sticker #
3C 1234	01
License Plate #	Use Area Designation

Primary Owner Name (Last, First, MI)	Phone #
Skier, Sally S.	(208) 123-4567
Mailing Address	
123 Snow St Anywhere, ID 83000	
Co-owner Name (Last, First, MI)	Phone #
Skier, Bob C	( )

Sally S. Skier

Applicant Must Sign To Be Valid

12/26/12

Date of Issue

01-0123

Vendor ID #

RLS

Agent Initials

FEES	
Reg. Fee:	$24.00
Vendor Fee:	$1.00
Total Fee:	$25.00

Copy Distribution: WHITE - Owner, CANARY - Parks & Recreation, PINK - Vendor

Idaho Department of Parks and Recreation
RECREATIONAL REGISTRATION

This form must be carried on the vehicle herein described during operation

ACTION	TYPE
☒ New ☐ Exempt	☐ Park N' Ski
☐ Renewal	☒ Temporary Park N' Ski
☐ Replacement Sticker	

2-13-13
Expiration Date

Y12-0567
Validation Sticker #

2C AAA44
License Plate #

11
Use Area Designation

Primary Owner Name (Last, First, MI)
Snowshoe, New

Phone #
(208) 456-7654

Mailing Address
9876 Santa Pl Anytown, ID 83000

Co-owner Name (Last, First, MI)

Phone #
( )

New Snowshoe
Applicant Must Sign To Be Valid

3 / 1 / 13
Date of Issue

44-0987
Vendor ID #

SCC
Agent Initials

FEES

Reg. Fee:	$ 6.50
Vendor Fee:	$ 1.00
Total Fee:	$ 7.50

Copy Distribution: WHITE - Owner, CANARY - Parks & Recreation, PINK - Vendor

Idaho Department of Parks and Recreation

RECREATIONAL REGISTRATION

This form must be carried on the vehicle herein described during operation

ACTION	TYPE
☐ New ☐ Exempt	☒ Park N' Ski
☐ Renewal	☐ Temporary Park N' Ski
☒ Replacement Sticker	

4/30/13	X13-999
Expiration Date	Validation Sticker #
2C 6789	3
License Plate #	Use Area Designation

Primary Owner Name (Last, First, MI)	Phone #
Ice, John M	(208) 321-1111
Mailing Address	
456 Cold St Somewhere, ID 83000	
Co-owner Name (Last, First, MI)	Phone #
	( )

John M. Ice

Applicant Must Sign To Be Valid

12/14/12

Date of Issue

01-0321

Vendor ID #

BR

Agent Initials

FEES	
Reg. Fee:	$1.00
Vendor Fee:	$1.00
Total Fee:	$2.00

Copy Distribution: WHITE - Owner, CANARY - Parks & Recreation, PINK - Vendor

Park N' Ski

Permits Sold Here

Park N' Ski Permit fees pay for your skiing facilities.

Permits are required on vehicles at these ski areas.

Idaho Department of Parks and Recreation
P.O. Box 83720
Boise, Idaho 83720-0065

(208) 334-4199

www.parksandrecreation.idaho.gov

1. Banner Ridge — 22 mi. northeast of Idaho City on Hwy. 21
2. Gold Fork — 20 mi. northeast of Idaho City on Hwy. 21
3. Whoop-Um-Up — 18 mi. northeast of Idaho City on Hwy. 21
4. Beaver Creek Summit — 24 mi. northeast of Idaho City on Hwy. 21
7. Fish Creek Meadow — 9 mi. south of Grangeville on Forest Service Rd. 221
9. Elk River — 20 mi. east of Bovill on Hwy. 8
10. Palouse Divide — 23 mi. east of Potlatch on Hwy. 6
11. 4th of July Pass — 18 mi. east of Coeur d'Alene on Int. 90
12. Mink Creek — 15 mi. south of Pocatello on Bannock Hwy.
13. Brimstone / Buffalo River — 1/4 mi. north of Island Park Ranger Station on Hwy. 20
15. Bear Gulch / Mesa Falls — 7 mi. northeast of Ashton on Mesa Falls Forest Hwy. 47
16. Falls River Ridge — 10 mi. east of Ashton on the Cave Falls Rd.
19. Hanna Flats — West side of Priest Lake
20. Priest Lake Golf Course — West side of Priest Lake
21. Rocky Point — South side of Priest Lake
22. Coolin Mountain — South side of Priest Lake
23. Priest Lake State Park — East side of Priest Lake including Indian Creek

Idaho Invasive Species Fund (IISF)

The Idaho Invasive Species Fund (IISF) and sticker sales will assist in funding programs to prevent the introduction of invasive species into Idaho. The new law requires boaters, both motorized and non-motorized to contribute to the IISF.

The Law:
Under the Invasive Species Law, all motorized watercrafts not registered in Idaho and all non-motorized watercrafts must display IISF stickers in order to legally launch and operate in Idaho.

Which Vessels Must Obtain IISF Stickers?
Any motorized or sail powered watercraft not registered in Idaho and any non-motorized vessel (canoe, kayak, raft, drift boat, paddleboards – both rigid and inflatable, wind surfing boards, etc.) will need to have the sticker. Inflatable, non-motorized vessels less than 10 feet in length are exempt from this requirement. Wakeboards and kite boards are not considered vessels and are also exempt from this requirement.

Funding Prevention:
The fees generated from the sale of IISF stickers will fund vessel inspections and other efforts that will assist Idaho with preventing the introduction of invasive species like quagga and zebra mussels.

Sticker Placement:
For canoes, kayaks and other small rigid boats, the sticker can be placed near the bow of the boat above the water line on the port (left) side, or on the top of the vessel if there is little or no water line.

Questions?
If you have any questions regarding the registration process of the IISF, please contact the IDPR Registration Unit at: 1-800-247-6332 or online at www.parksandrecreation.idaho.gov.

If you have questions regarding the IISF program, please contact Idaho State Department of Agriculture at: 1-877-336-8676 or online at www.invasivespecies.idaho.gov.

IDAHO INVASIVE SPECIES FEES

ANNUAL IISF PRICES: **$22.00 ($20.50 for sticker + $1.50 vendor fee)** per *motorized* vessel registered out of state

$7.00 ($5.50 for sticker + $1.50 vendor fee) per *non-motorized* vessel (For Idaho Residents or Non-Residents)

DUPLICATE FEE: **$3.00 ($1.50 for sticker + $1.50 vendor fee)**

MULTIPLE REGISTRATIONS: You may use one registration form for multiple registrations. Please make sure you list all stickers that person/business is purchasing.

IDAHO REGISTERED BOATS: For convenience, the $10.00 Invasive Species Sticker fee is included in the annual Idaho boater registrations. There will not be a separate Invasive Species Sticker, the Idaho Boat Sticker will act as a two-in-one and cover boaters on both their boat registration and the Invasive Species.

LICENSED COMMERCIAL OUTFITTERS: Discounts are available **only through Idaho Department of Parks and Recreation** for licensed commercial outfitters with non-motorized fleets of six or more vessels. Please contact 1-800-247-6332 or see our website at www.parksandrecreation.idaho.gov for more information.

Idaho Invasive Species Sticker

☑ Non-Motorized ☐ Registered Outside of Idaho

Expiration Date 12/31/13 IISF Sticker # G13-012345

Name Ian Invasive

Address 123 Mussel Ct

City Somewhere State ID ZIP 83000

Phone # 208-123-7654 IISF Fee $5.50

Vendor # 01-4321 Vendor Fee $1.50

Issue Date 5/16/13 Total $7.00

Copy Distribution: White-Owner, Canary-Parks And Rec, Pink-Vendor

Idaho Invasive Species Sticker

☐ Non-Motorized ☑ Registered Outside of Idaho

Expiration Date 12/31/13 IISF Sticker # A13-087654

Name Mike Mussel

Address 678 Aquatic Way

City Nowhere State OR ZIP 90000

Phone # 543-678-9000 IISF Fee $20.50

Vendor # 05-0432 Vendor Fee $1.50

Issue Date 6/1/13 Total $22.00

Copy Distribution: White-Owner, Canary-Parks And Rec, Pink-Vendor

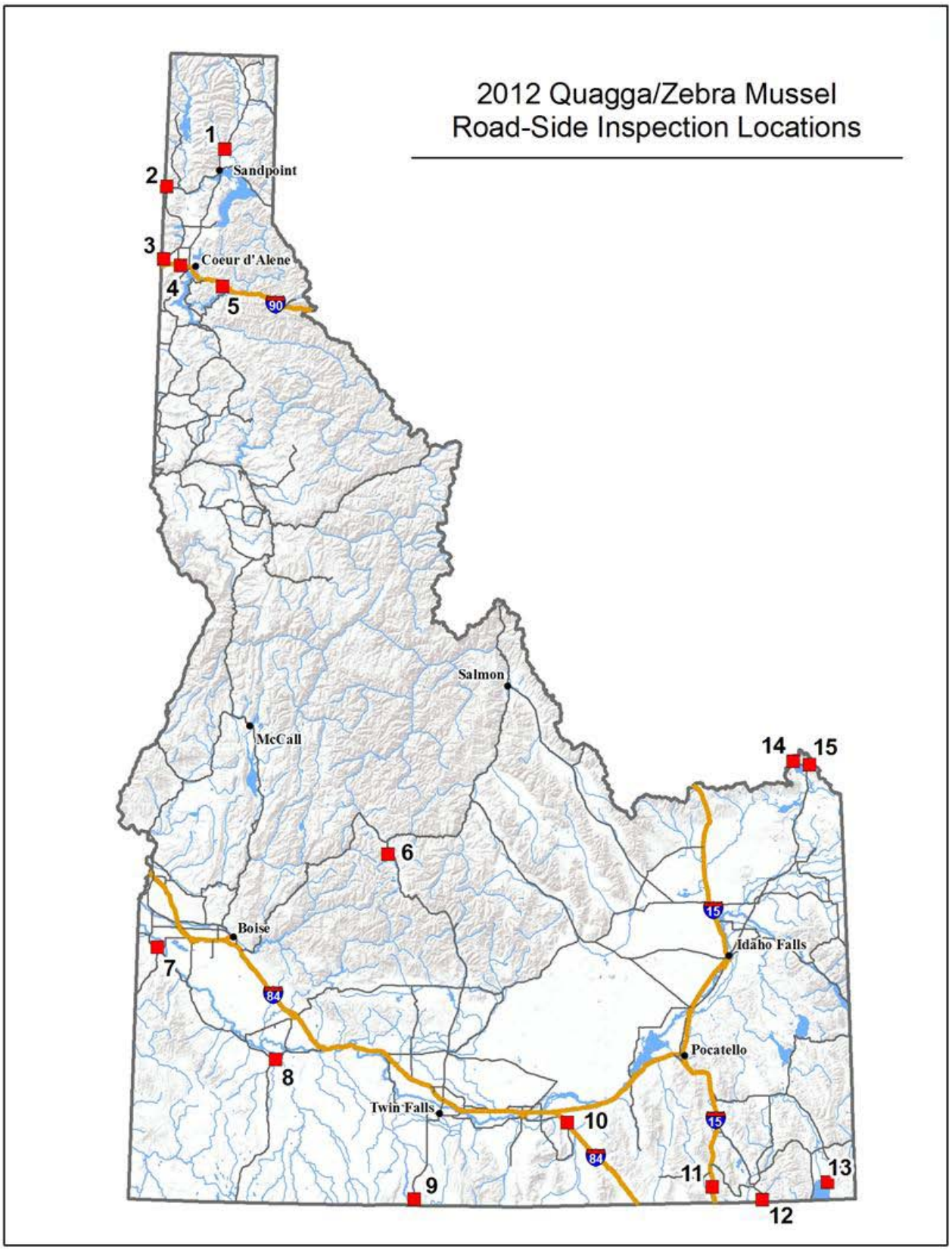
2012 Quagga/Zebra Mussel
Road-Side Inspection Locations
1
2
3
4
5
6
7
8
9
10
11
12
13
14
15
Sandpoint
Coeur d'Alene
90
Salmon
McCall
Boise
84
Twin Falls
Pocatello
Idaho Falls
15

BOAT REGISTRATION REQUIREMENTS

Who Must Register
Motorboats and sailboats for which Idaho is the state of principal use must have an Idaho Certificate of Registration and validation stickers to operate legally on Idaho water. Personal watercraft such as, Jets Skis, Waverunners, etc. are considered motorboats. Non-motorized (manually powered) boats without motors do not need to be registered, but if a motor or sail is added it must be registered. The only exceptions are:

- Manually propelled vessels (such as canoes, rafts and kayaks)
- Float tubes (single inner tube construction without a motor)
- Sailboards
- Vessels properly registered in another state and on Idaho waters for 60 or fewer consecutive days
- Vessels documented with the U.S. Coast Guard

State of Principal Use
The state in which the boater does most of his or her boating is the “State of Principal Use”. **This has nothing to do with where a boater lives.** Many boaters living in neighboring states do most of their boating in Idaho waters and have selected Idaho as the State of Principal Use. They should have Idaho Registration Numbers and you should sell Validation Stickers to them.

Registration Number
Also known as the U.S. Coast Guard number or Bow number, the registration number is determined by the State of Principal Use. If the boater is currently registered in another state and wants to change their registration to Idaho, issue them an Idaho registration number (the little white stickers ID1234AN). Put the little white sticker on the yellow copy of the registration (the one you send to us). Be sure to pro-rate the fees for this registration. The Registration Number stays with the boat as long as the boat is registered in the state. The Registration number begins with the two-letter code for the state of principal use, ID for Idaho, WN for Washington, UT for Utah, WY for Wyoming, etc. The Idaho (ID) number must be attached or painted on each side of the forward half of the boat similar to the illustrations. On a flared bow the number should be placed on some part of the forward half of the boat where it can be easily read. The numbers and letters must be vertical (not slanted), plain block (not script or varying in thickness), and any border outline or shadowing must be disregarded in determining the height or color contrast. The number's color should be in contrast with the boats hull color. No other number or letters can be displayed nearby if they will interfere with the identification of the vessel by its registration number.

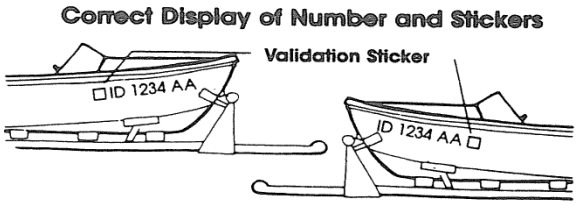

Validation Stickers
This is the set of stickers you sell to a boater who has Idaho Registration Numbers. These stickers are valid for one calendar year. The validation stickers must be placed on each side of the boat, 3 inches aft (towards the back of the boat) and in line with the registration numbers as shown in the illustrations. Only the current sticker should be displayed.

The validation sticker will also be the Idaho Protection Against Invasive Species sticker. The $10 fee for boats registered in Idaho will be collected automatically as part of the registration fee.

HIN - Hull Identification Number:
The hull identification number is the serial number for a boat. It is permanently attached to the boat on the upper right hand corner of the transom (back of the boat) and again somewhere on the interior of the boat. On boats built before 1972, there may not be a hull identification number. **When in doubt, check the boat**.

Federal and state laws require hull identification numbers on all vessels. Titling boats is now a law and accurate hull identification numbers are required. **Do your customer a favor and make sure the hull identification number on the registration form is correct**.

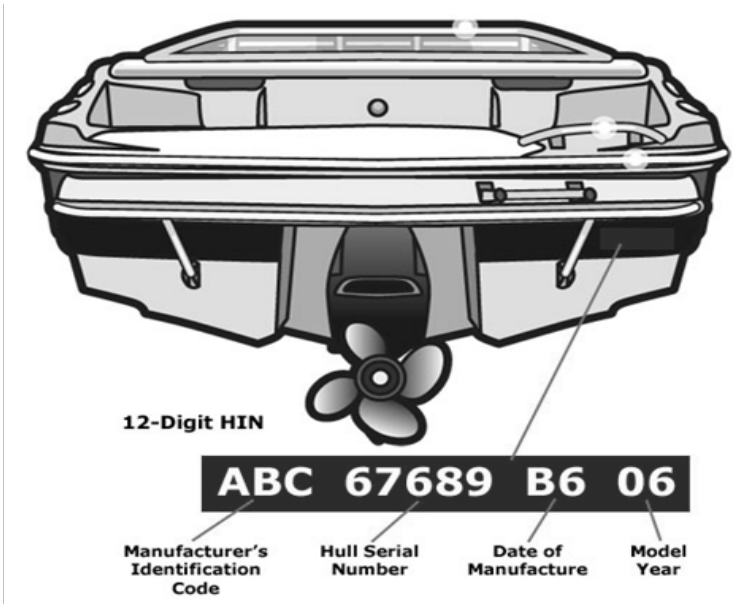

The first three letters of the HIN is the manufacturer's code for the boat. Those three letters go on the **"make"** line of the registration form. We have the list of all current manufacturers. Give us a call if you have questions.

Primary Use Area & Secondary Use Area:
When the registration laws were revised in 1986, it was decided that the boater may choose the area where they want the registration money to go. This is the Primary Use Area. If the boater uses two different areas, they may choose both areas, one primary and one secondary. There can only be two areas designated. Use the **Major Bodies of Water map** to find the area the boater will use. Then write in the number to the left of the county name on the registration form in the use area blanks. You must give the boater a chance to choose the area. Simply writing in your county number is not fair to the boater.

Pro-Rated Registrations:
Idaho law allows the fee to be pro-rated on a boat that has **NEVER** been registered in Idaho. This may be a new boat or a used boat being brought into Idaho for the **FIRST** time. In other words, if a boat has never had Idaho registration numbers on the bow of the boat, the registration fee can be pro-rated. If the boat previously had registration numbers, but they are now worn off or there is no record of the number, it is NOT considered a new (first time) registration. It is also NOT considered a new registration if the Idaho registered boat is registered in another state for a time then returns to Idaho. If the boater has no record of the Idaho registration number, **please call us, IDPR maintains Idaho Boat Registrations for several years.**

Federally Documented Boats:
Federally documented boats are registered with the U.S. Coast Guard and are assigned a six-digit number. They cannot and will not have registration or validation sticker numbers on the bow. If someone asks about documentation have them call IDPR. IDPR will direct them to the proper US Coast Guard representative.

Sales Tax Form ST 109:
Any transfer of ownership of tangible personal property in the state of Idaho requires the collection of sales tax. All recreational machines, boats, snowmobiles, ATV's and motorbikes are tangible personal property and subject to sales tax. The collection of, or the recognition that sales tax is due, rests with you. Be sure that the buyer has a valid bill of sale and if possible, the transfer section on the back of the registration form completed. You don't want to be in the business of registering stolen boats.

If you have a sales tax number and are collecting taxes on sales of other kinds of things, you may collect the tax and include it in your tax transmittal to the tax commission. If you don't have a tax number use the ST 109. Simply fill in the blanks, give the white and yellow copies to the new owner and send the pink copy to us with your registration transmittal. The new owner will send the yellow copy with a check for the tax to the tax commission.

Other Useful Information:
All vessels (boats) must carry at least one U.S. Coast Guard approved personal flotation device (PFD) for every person aboard. The PFD's must be of proper size, be readily accessible, and be in good condition.

All vessels (boats) must have a sound-producing device (whistle or horn), which is audible for at least one-half mile, and produce a blast of at least 4 to 6 seconds. The small CO^2 horns work very well and are relatively inexpensive. A list of frequently asked questions can be found at: http//parksandrecreation.idaho.gov/recreation/boating/faqs.aspx.

Vessel Titling Act:
Model year 2000 or newer vessels purchased on or after 1/1/2000 with a permanently attached mode of propulsion, such as: an inboard motor, sail, personal watercraft or other propelling machinery, and all vessels over twelve feet regardless of the mode of propulsion are required to be titled. If the customer purchased it before that date, he or she is strongly encouraged to title it, but not required to do so. Vessels excluded from the titling process are: rowboats, canoes, kayaks, inflatable vessels, rafts, barges, non-motorized paddle vessels, sailboards, tenders, seaplanes, documented vessels, and vessels owned by the United States or a foreign state or political subdivision.

Titling provides convincing proof of ownership when the vessel is sold. A registration is NOT proof of ownership. Titling enhances the chance of recovery in the event the vehicle is stolen. Also, should the customer suffer loss of the vehicle, some insurance companies will not provide payoff if the vehicle is not titled in the customer's name. For lien perfection, a title filing shall be required for liens against vessels created on and after January 1, 2000.

A customer may apply for title at the local DMV. He or she will need to take any available ownership documents including any signed title from the seller, manufacturer's certificate of origin, prior registration, or a bill of sale. Applicable sales tax will also be due. Direct any questions concerning this process to your local DMV or to the Idaho Transportation Department (ITD) Titles Section at 208-334-8663.

MAIL RENEWAL REGISTRATION FORM

(SEE EXAMPLE PAGE 39)

Vendors are encouraged to use the Renewal Registration forms that were mailed to the customer whenever possible. The printed forms provide the necessary registration information and reduce the need for hand-writing.

PART A

Part A has the customer and vehicle information, a space for the new sticker number and a space for the issue date. If corrections are needed, draw a single line through the information and write the corrections. Please be sure to fill in the **Sticker Number and Issue Date.** If this information is missing Parks & Recreation has no way to identify what sticker number and issue date was assigned the vessel. Send Part A to Parks & Recreation with your monthly transmittal. If you want to have a copy for your records you will have to make one before you send the monthly transmittal.

PART B

Make any necessary corrections as noted above, fill in the **Sticker Number and Issue Date** (same as Part A). Fill in the space for the Vendor Number and Your Initials. The registration is only valid if the following items are complete:

- Owner signature
- Issue date and sticker number listed
- Vendor number and initials provided

Give **Part B** to the customer and send **Part A** to Parks & Recreation with your monthly transmittal. Part B is now the new registration and needs to be carried on the vessel.

IF A CUSTOMER DOES NOT BRING IN THEIR REGISTRATION FORM, YOU CAN CALL US FOR THE INFORMATION AT 1-800-247-63325 MONDAY THRU FRIDAY 8:00 AM – 5:00 PM MST.

BOAT AND INVASIVE SPECIES RECREATIONAL REGISTRATION PART A

(Submit this section with payment)

STICKER NUMBER
B2012000001
B13-001234

BOATER, BILLY A — NAME (LAST, FIRST, M.I.)
5555 — PIN
REGISTRATION NO. ID0000AB

BOATER, BETH T — CO-OWNER (LAST, FIRST, M.I.)
PRIMARY USE AREA 28 SECONDARY USE AREA 05 (See Back)

456 LAKE RD
SOMEWHERE, ID 83000
MAILING ADDRESS

2003 BOMB SEADOO
YEAR MAKE MODEL

LENGTH-FT. 10 USE PL

123-456-7890 — PHONE NUMBER
BILLYBOATER@BOAT.NET — EMAIL ADDRESS

TYPE PW HULL PI

PROP. PW H.P. 70 G FUEL

ZZN12345B987
HULL IDENTIFICATION NUMBER

☐ SOLD ☐ DESTROYED

ISSUE DATE 5/6/13

FEES: Registration* $ 30.00
Vendor 1.50

TOTAL $ 31.50

* Includes $10.00 for Idaho Protection Against Invasive Species Sticker.

INSTRUCTIONS:
1. Review information on Parts A and B. If ownership has changed, contact your County MVD. An Idaho Title and bill of sale are required.
2. If corrections are necessary, draw a single line through the incorrect information and write in the corrections.
3. Verify your use area selection. Refer to PRIMARY USE AREAS list on back for USE CODES. This designation determines where the registration fees will be sent. The area shown is your last year designation.

Manufactured by Alexander Clark Business Forms - Boise, Idaho - (208) 322-0611

▼ DETACH HERE ▼

TO RENEW BY MAIL, send PART A with your check to Department of Parks and Recreation, Registration Section, PO Box 83720, Boise, ID 83720-0065.
TO RENEW ONLINE, go to www.parksandrecreation.idaho.gov click on REGISTRATIONS & PERMITS and use the personal identification number (PIN) identified above.
TO RENEW AT A VENDOR OR COUNTY MVD, take the entire form with you. The vendor can validate the registration form, collect the appropriate fee, and issue your stickers.
If you have any questions about your renewal, please contact the Department of Parks and Recreation, Registration Section at 1-800-247-8332.

▼ DETACH HERE ▼

BOAT AND INVASIVE SPECIES RECREATIONAL REGISTRATION PART B

B2012000001

BOATER, BILLY A — NAME (LAST, FIRST, M.I.)
REGISTRATION NO. ID0000AB

BOATER, BETH T — CO-OWNER (LAST, FIRST, M.I.)
PRIMARY USE AREA 28 SECONDARY USE AREA 05 (See Back)

456 LAKE RD
SOMEWHERE, ID 83000
MAILING ADDRESS

2003 BOMB SEADOO
YEAR MAKE MODEL

LENGTH-FT. 10 USE PL

123-456-7890 — PHONE NUMBER
BILLYBOATER@BOAT.NET — EMAIL ADDRESS

TYPE PW HULL PI

PROP. PW H.P. 70 G FUEL

ZZN12345B987
HULL IDENTIFICATION NUMBER

FEES: Registration* $ 30.00
Vendor 1.50

TOTAL $ 31.50

* Includes $10.00 for Idaho Protection Against Invasive Species Sticker.

OWNER SIGNATURE Billy Boater

ISSUE DATE 5/6/13 STICKER NUMBER B13-01234

VENDOR NUMBER 01-0000 VENDOR INITIALS TH

THREE-PART **BOAT** REGISTRATION FORM

PLEASE *PRINT CAREFULLY AND CLEARLY!!*
IDPR STAFF MUST BE ABLE TO READ AND ENTER INFORMATION WRITTEN ON THE BOAT REGISTRATION FORM INTO THE RIS DATA BASE.

ACTION: **NEW:** This box should be checked if you are registering a brand new boat or registering a boat that has NEVER had an Idaho registration. This should include any boats being issued a Registration Number (the little white sticker). You need to have a bill of sale, title or other proof of ownership to register a "New" boat.

RENEWAL: This box should be checked when you sell stickers to a boat that already has an Idaho Registration Number.

A **transfer** is required when a boat registered for **the current year** is sold and the new owners need to transfer the registration into their name. A bill of sale or proof of ownership is required. Only the owner information changes. The new owner may also designate new use areas. The sticker number is the same. **Please do not issue a new set of stickers.** The new owner should provide you with a bill of sale and, if possible, the registration form with the transfer section on the back completed. You should collect the sales tax or complete an ST-109 at the time of transfer. Complete the registration form with the same boat information as the original.

Non-profit registrations are for boats owned by any charitable or religious organization not used and operated for profit. This includes Boy Scouts, Girl Scouts, Church camps and others.

A **Replacement** (sometimes called a duplicate) is for a lost or destroyed sticker. Before you issue new validation stickers and a new registration, make sure the boat is registered for the current year. The owner may show you the registration form or you can call IDPR for confirmation. Once verified, complete a new registration form with the same boat information as the original.

Dealer registrations are designed for boat dealers or manufacturers who will be **demonstrating** a boat prior to sale. Boats owned by dealerships but used for recreation are not Dealer registrations. Some dealers may need more than one set of registrations because they might be demonstrating several boats at a time. The registration numbers and stickers **are not to be permanently attached** to the boat.
The best method we have heard is to mount the registration number and validation sticker on a piece of plastic and use nylon cable ties to attach it to a rail.

Governmental agencies such as County Sheriffs, Fish & Game, Forest Service, and others are issued stickers with only the $10.00 charge for the Invasive Species Sticker.

Idaho Department of Parks and Recreation
RECREATIONAL REGISTRATION

This form must be carried on the vessel herein described during operation

ACTION		TYPE
☐ New	☐ Replacement Sticker	☒ Boat Registration
☒ Renewal		
☐ Transfer	☐ Dealer	
☐ Non-profit	☐ Exempt	

12/31/13
Expiration Date

ID1234AB
Registration Number

GLA5685J607
HIN

B13-443322
Validation Sticker #

2007 GLA 205 Red & White
Year Make Model Description

Primary Owner Name (Last, First, MI): Boater, Tom K
Phone #: (208) 555-9876
Mailing Address: 321 Flood Ct Anywhere, ID 83000

Co-owner Name (Last, First, MI): Boater, Debbie
Phone #: ( )

Use Designation:
State of Principle Use - ID
Primary Use Area - 28
Secondary Use Area - 09

Boat Information:	USE	TYPE	HULL	PROP	FUEL	HP
Length: 18 FT	PL	OB	PL	IN	G	190

Tom Boater
Applicant Must Sign To Be Valid

5/4/13
Date of Issue

28-0000
Vendor ID #

EST
Agent Initials

FEES

Reg. Fee*:	$ 42.00
Vendor Fee:	$ 1.50
Total Fee:	$ 43.50

* Includes $10.00 for Idaho Protection Against Invasive Species Sticker.

Copy Distribution: WHITE - Owner, CANARY - Parks & Recreation, PINK - Vendor

REGISTRATION TYPE: Boat Registration

EXPIRATION DATE: 12/31/2013

REGISTRATION NUMBER: This is the ID number (little white sticker), that goes on the bow of the boat. You will need to assign a Registration Number to all boats that have NEVER before been registered in Idaho. This number should identify this boat regardless of future ownership. If you are unsure about assigning a Registration Number, please call the Registration Section at IDPR. We will be happy to check on possible existing numbers as registration number records at our office go back to 1980s. If you do not have any Registration Numbers, call our office and we will assign some to you. Do not register a brand new boat without assigning a Registration Number. Put the ID number (little white sticker) on the yellow copy of the registration (the one you send to us). The fees for this boat should be pro-rated after April 1st. (See the Boat Fee Schedule on page 33).

HIN: This is where you enter the HULL IDENTIFICATION NUMBER. It is very important to have this number correct. (Accurate and complete). Emergency Response or Law Enforcement may need to identify the boat. Boats built before 1972 may not have a HIN. If the boat owner does not have a HIN, have them contact the Idaho Transportation Department Vehicle Services Department at (208) 334-8663.

VALIDATION STICKER #: This is the number on the sticker you sell them.

YEAR-MAKE-MODEL-DESCRIPTION: Enter the year, make and model of the boat. This information will help provide a full description of this unique vessel. These are also critical for ownership identification or reporting stolen vessels to Law Enforcement.

OWNER NAME, ADDRESS, PHONE NUMBER, CO-OWNER NAME: Please print carefully, last name first, full **MAILING** address, zip code, and telephone number with area code. Personal information is used only for official business.

USE DESIGNATION:

STATE OF PRINCIPAL USE: This should always be ID for Idaho.

PRIMARY USE AREA/SECONDARY USE AREA: Ask the owners which area they wish to designate their fees to. Refer them to the Major Bodies of Water map. Enter the designation number. NOTE: If the use area designation is left blank or completed with a number/letter combination not listed on the map, the fees will be considered undesignated.

IF A CUSTOMER DOES NOT BRING IN THEIR RENEWAL FORM, YOU CAN CALL US FOR THE INFORMTATION AT 1-800-247-6332 MONDAY THRU FRIDAY 8:00 AM – 5:00 PM MST.

Idaho Boating Progam Locations

Major Bodies of Water

Boater is responsible for knowing in which county boating activity occurs.

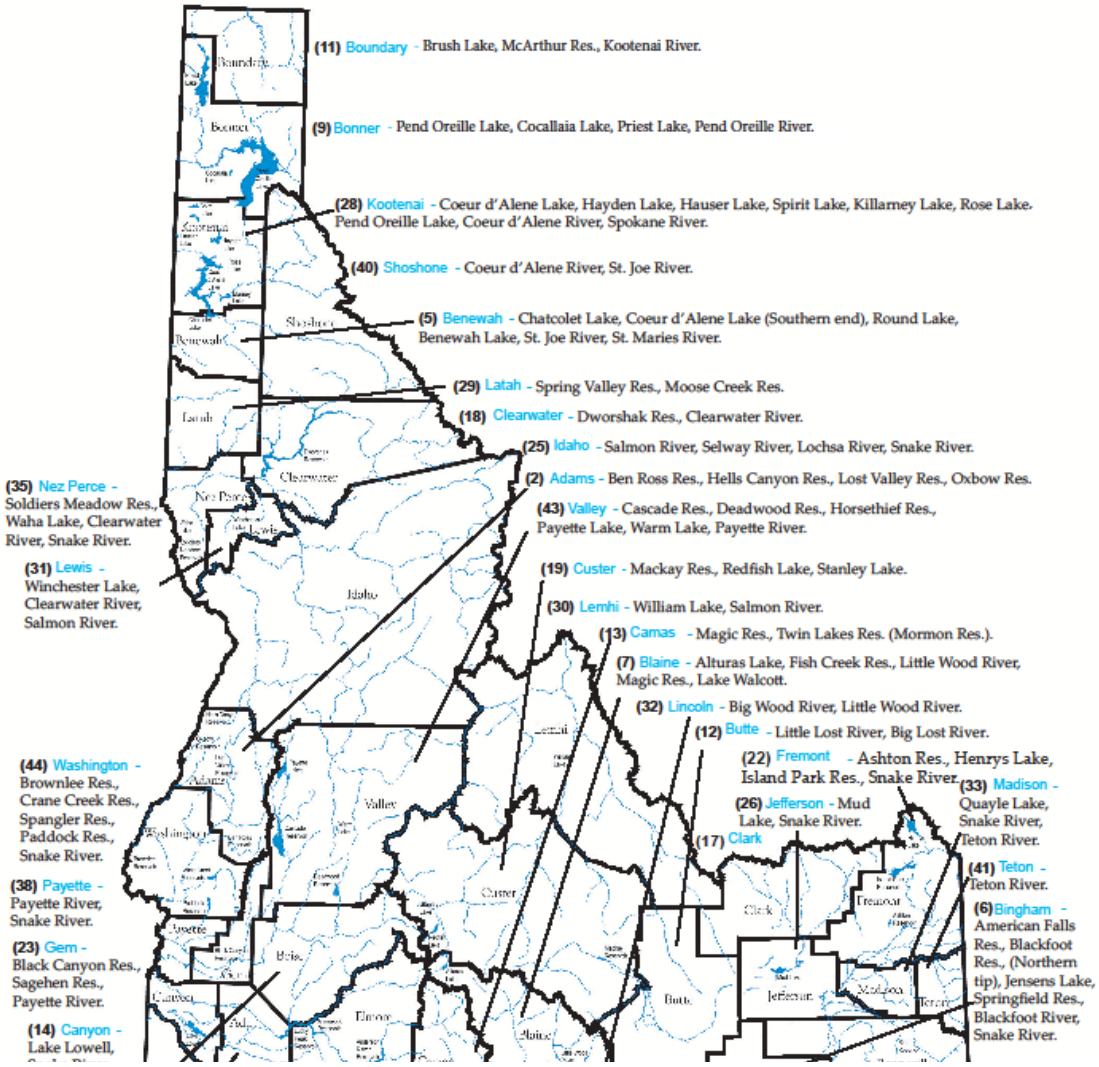

Idaho Department of Parks and Recreation
RECREATIONAL REGISTRATION

This form must be carried on the vessel herein described during operation

ACTION		TYPE
☐ New	☐ Replacement Sticker	☒ Boat Registration
☐ Renewal		
☐ Transfer	☐ Dealer	
☐ Non-profit	☒ Exempt	

12/31/13
Expiration Date

ID6115AC
Registration Number

HEW42354H608
HIN

B13-6789
Validation Sticker #

2008 HEW SPTMN Silver
Year Make Model Description

Primary Owner Name (Last, First, MI)
Any County Idaho

Phone #
208 484-9999

Mailing Address
8716 River Rd Anyplace, ID 80000

Co-owner Name (Last, First, MI)

Phone #
( )

Use Designation:
State of Principle Use - ID
Primary Use Area - 14
Secondary Use Area -

Boat Information:

	USE	TYPE	HULL	PROP	FUEL	HP
Length: 16 FT	PL	OB	M	OB	G	90

John Smith
Applicant Must Sign To Be Valid

2/23/13
Date of Issue

14-0017
Vendor ID #

MLB
Agent Initials

FEES	
Reg. Fee*:	$ 10.00
Vendor Fee:	$ —
Total Fee:	$ 10.00

* Includes $10.00 for Idaho Protection Against Invasive Species Sticker.

Copy Distribution: WHITE - Owner, CANARY - Parks & Recreation, PINK - Vendor

BOAT INFORMATION:

LENGTH: The length should be in feet only. **DROP** the inches. For example; 15'6" will be 15', 15'11" will be 15'.

USE:		**TYPE**:	
Pleasure	PL	Open boat	OB
Skiing	SK	Cabin boat	CB
Rent/Lease	RL	House boat	HB
Dealer	DL	Personal Watercraft	PW
Government	GV	Pontoon	PT
Commercial Passenger	CP	Sailboat	SB
Commercial Fishing	CF		

HULL MATERIAL:		**PROPULSION:**		**FUEL:**	
Fiberglass	PL	Inboard	IN	Gasoline	G
Metal	ML	Inboard/Outboard	IO	Diesel	D
Wood	WD	Outboard	OB	Electric	E
Inflatable	IN	Sail Only	SA		
		Sail w/inboard	SI		
		Sail w/outboard	SO		

DATE OF ISSUE: The date of the sale.

VENDOR ID#: Your assigned number. (Example 13-0123)

AGENT INITIALS: Your initials.

ST-109: If you are not a County Office or a Dealer with an assigned Sales Tax Number and you are doing a registration where ownership has changed, you will need to complete an ST-109. Simply fill in the new owner information and the seller information. Then, with the help of the new owner, complete the tax computation on Block B. Determine if the tax is owed in Block C. Have the new owner sign in Block D and complete the vendor portion on the bottom of the form. Then give the new owner the white and yellow copies. You send the pink one to us with the transmittal.

BOAT FEES: $ See **BOAT FEE SCHEDULE** on page 45 for length of boat

VENDOR FEE: $ 1.50

TOTAL FEE: $ Fee schedule plus $1.50.

Have the customer sign the form, give the set of stickers and the white original registration form to the owner, and you're done.

The registration shall be on board and available at all times for inspection.

Idaho Department of Parks and Recreation
RECREATIONAL REGISTRATION

This form must be carried on the vessel herein described during operation

ACTION		TYPE
☐ New	☐ Replacement Sticker	☒ Boat Registration
☐ Renewal		
☒ Transfer	☐ Dealer	
☐ Non-profit	☐ Exempt	

12/31/13
Expiration Date

ID7754AF
Registration Number

GLA50135F07
HIN

B13-1155666
Validation Sticker #

2007 GLA SX195 Purple
Year Make Model Description

Primary Owner Name (Last, First, MI)
Newowner, Dick

Phone #
208 333-0000

Mailing Address
1234 Marina Dr. Anyplace, ID 83000

Co-owner Name (Last, First, MI)
Newowner, Kathy

Phone #
( )

Use Designation:
State of Principle Use - ID

Primary Use Area - 43

Secondary Use Area -

Boat Information:	USE	TYPE	HULL	PROP	FUEL	HP
Length: 19 FT	PL	OB	PL	IO	G	200

Dick Newowner
Applicant Must Sign To Be Valid

7/3/13
Date of Issue

43-0123
Vendor ID #

MAL
Agent Initials

FEES

Reg. Fee*:	$ 3.00
Vendor Fee:	$ 1.50
Total Fee:	$ 4.50

* Includes $10.00 for Idaho Protection Against Invasive Species Sticker.

Copy Distribution: WHITE - Owner, CANARY - Parks & Recreation, PINK - Vendor

BOAT REGISTRATION FEES

NEW BOAT REGISTRATION FEE: Varies depending on length and time of year:
See Fee Schedule on next page.
VENDOR FEE: 1.50

TOTAL FEE: Fee from fee schedule form, plus Vendor Fee

RENEWAL BOAT REGISTRATION FEE: Varies depending on length:
See Fee Schedule on next page.
VENDOR FEE: 1.50

TOTAL FEE: Fee from Fee schedule form, plus Vendor Fee

BOAT TRANSFER FEE:	$3.00
VENDOR FEE:	1.50
TOTAL FEE:	4.50

BOAT NON-PROFIT FEE:	12.00
VENDOR FEE:	1.50
TOTAL FEE:	13.50

BOAT REPLACEMENT FEE:	3.00
VENDOR FEE:	1.50
TOTAL FEE:	4.50

BOAT DEALER REGISTRATION:	23.00
VENDOR FEE:	1.50
TOTAL FEE:	24.50

BOAT EXEMPT FEE:	10.00
VENDOR FEE:	0
TOTAL FEE:	10.00

BOAT FEE SCHEDULE

(Includes $10 for Idaho Protection Against Invasive Species Sticker fee)

Effective April 9, 2009, boaters in Idaho are required to purchase an Idaho Protection Against Invasive Species Sticker prior to launch in the waters of Idaho. The sticker fee for boats registered in Idaho is $10.00 and has already been added to the fees below.

	RENEWALS	**NEW** *HAS NEVER HAD AN IDAHO REGISTRATION*			
		Jan 1 – March 31 100%	**April 1 – June 30 75%**	**July 1 – Sept 30 50%**	**Oct 1 – Dec 31 25%**
12’ and under	30.00	30.00	25.00	20.00	15.00
13’	32.00	32.00	26.50	21.00	15.50
14’	34.00	34.00	28.00	22.00	16.00
15’	36.00	36.00	29.50	23.00	16.50
16’	38.00	38.00	31.00	24.00	17.00
17’	40.00	40.00	32.50	25.00	17.50
18’	42.00	42.00	34.00	26.00	18.00
19’	44.00	44.00	35.50	27.00	18.50
20’	46.00	46.00	37.00	28.00	19.00
21’	48.00	48.00	38.50	29.00	19.50
22’	50.00	50.00	40.00	30.00	20.00
23’	52.00	52.00	41.50	31.00	20.50
24’	54.00	54.00	43.00	32.00	21.00
25’	56.00	56.00	44.50	33.00	21.50
26’	58.00	58.00	46.00	34.00	22.00
27’	60.00	60.00	47.50	35.00	22.50
28’	62.00	62.00	49.00	36.00	23.00
29’	64.00	64.00	50.50	37.00	23.50
30’	66.00	66.00	52.00	38.00	24.00
Add for each additional foot of length	2.00	2.00	1.50	1.00	.50

OFF-HIGHWAY VEHICLE (OHV) REGISTRATION REQUIREMENTS

General Requirements:
Any motorbike, all terrain vehicle (ATV), utility type vehicle (UTV) or specialty off-highway vehicle (SOHV) used off highways or on roads located on state or federal lands that are open for such use must have an Idaho off-highway vehicle (OHV) registration sticker. See Page 52 for definition of each vehicle type. Non-residents riding in Idaho do not need an Idaho registration if they are appropriately registered in their home state. However, if their home state does not have an OHV registration program or they have not registered in their home state, they must register in Idaho before operation within the state.

Combined Validation Stickers:
The same sticker will be used for all types of OHV registrations including Motorbike, ATV, UTV and SOHV. We hope this reduces the confusion seen in prior years. Sticker numbers will all start with M12.

Restricted Vehicle License Plates:
If a motorbike, ATV, or UTV is operated on city, county or highway district roads open to OHV travel, the vehicle must have a restricted vehicle license plate ***in addition*** to the OHV registration sticker. Owners of motorbikes, ATVs and UTVs will be able to purchase a restricted vehicle plate from a county motor vehicle assessor's office (DMV) for $3.00. The plate is valid for 7 years. OHV registration stickers must be ***affixed to the plate*** and must be renewed annually. Motorbikes with a displacement of 50 cubic centimeters or less are exempt from purchasing the restricted vehicle license plate, but not from purchasing and properly displaying an OHV Registration Sticker. SOHV's are exempted from the restricted plate.

Sticker Placement:
The OHV Registration sticker must be visible and kept legible at all times. On motorbikes, the registration sticker is to be placed on the rider's right fork. On ATV, UTV, or SOHV's the registration stickers are to be placed on the rear fender. On the Restricted Vehicle License Plate, the sticker is placed in the lower right corner.

Titling Requirements:
If a customer purchased a motorbike or ATV since 1/1/1991 or purchased a UTV since 7/1/2006, the customer is required to title it in his or her name. If the customer purchased it before that date, he or she is strongly encouraged to title it, but not required to do so. Titling provides convincing proof of ownership when the vehicle is sold. A registration is NOT proof of ownership. Titling enhances the chance of recovery in the event the vehicle is stolen. Also, should the customer suffer loss of the vehicle, some insurance companies will not provide payoff if the vehicle is not titled in the customer's name. A customer may apply for title at the local DMV. He or she will need to take any available ownership documents including any signed title from the seller, manufacturer's certificate of origin, prior registration, or bill of sale. Applicable sales tax will also be due. Direct any questions concerning this process to your local DMV or to the Idaho Transportation Department (ITD) Titles Section at 208-334-8663.

MAIL RENEWAL REGISTRATION FORM

(SEE EXAMPLE)

Mail renewal registration forms are sent to all prior year registrants. Vendors are expected to use the Renewal Registration forms that were mailed to the customer whenever possible. The printed forms provide the necessary registration information and reduce the need for hand-writing.

PART A

Part A has the customer and vehicle information, a space for the new sticker number and a space for the issue date. If corrections are needed, draw a single line through the information and write the corrections. Ask the customer what Primary Use Area County he or she wants to designate. Please be sure to fill in the **Sticker Number, Issue Date and Primary Use Area County.** If this information is missing, IDPR has no way to identify what sticker number and issue date was assigned the vehicle and no way to know where funds are to be designated. Send Part A to IDPR with your monthly transmittal. If you want to have a copy for your records you will have to make one before you send the monthly transmittal.

PART B

Make any necessary corrections as noted above, fill in the **Sticker Number and Issue Date** (same as Part A). Fill in the space for the Vendor Number and Your Initials. The registration is only valid if the following items are complete:

- Owner signature
- Issue date and sticker number listed
- Vendor number and initials provided

Give **Part B** to the customer and send **Part A** to IDPR with your monthly transmittal. Part B is now the new registration and needs to be carried on the vehicle.

IF A CUSTOMER DOES NOT BRING IN THEIR RENEWAL FORM, YOU CAN CALL US FOR THE INFORMATION AT 1-800-247-6332 MONDAY THRU FRIDAY 8:00 AM – 5:00 PM MST.

STICKER NUMBER
M2012000001
M13-002468

OFF-HIGHWAY RECREATIONAL REGISTRATION PART A
MOTORBIKE/ATV/UTV/SOH
(Submit this section with payment)

SAMPLE, SALLY — NAME (LAST, FIRST, M.I.)
9999 — PIN
43 — PRIMARY USE AREA (SEE BACK)

CO-OWNER (LAST, FIRST, M.I.)
2000 — YR.
POLS — MAKE
SPRT500 — MODEL

1234 MAIN ST
ANYTOWN, ID 83000
MAILING ADDRESS
9XBBC25A4V999999
SERIAL NUMBER

208-555-5555
PHONE NUMBER
EMAIL ADDRESS

☐ MOTORBIKE ☐ ATV ☐ UTV ☐ SPECIALTY ☐ SOLD ☐ DESTROYED

INSTRUCTIONS:
1. Review information on Parts A and B. If ownership has changed, contact your County MVD. An Idaho Title and bill of sale are required.
2. If corrections are necessary, draw a single line through the incorrect information and write in the corrections.

ISSUE DATE 6/12/13

FEES: Registration* $ 10.50
Vendor 1.50
TOTAL $ 12.00
* Includes $1.00 for Idaho Department of Lands and $1.00 for law enforcement.

TO RENEW BY MAIL, send PART A with your check to Department of Parks and Recreation, Registration Section, PO Box 83720, Boise, ID 83720-0065.
TO RENEW ONLINE, go to www.parksandrecreation.idaho.gov click on REGISTRATIONS & PERMITS and use the personal identification number (PIN) identified above.
TO RENEW AT A VENDOR OR COUNTY MVD, take the entire form with you. The vendor can validate the registration form, collect the appropriate fee, and issue your stickers.
If you have any questions about your renewal, please contact the Department of Parks and Recreation, Registration Section at 1-800-247-6232.

▼ DETACH HERE ▼

Manufactured by Alexander Clark Business Forms - Boise, Idaho - (208) 322-0811

▼ DETACH HERE ▼

OFF-HIGHWAY RECREATIONAL REGISTRATION PART B
MOTORBIKE/ATV/UTV/SOH

M2012000001

SAMPLE, SALLY — NAME (LAST, FIRST, M.I.)
43 — PRIMARY USE AREA (SEE BACK)

CO-OWNER (LAST, FIRST, M.I.)
2000 — YR.
POLS — MAKE
SPRT500 — MODEL

1234 MAIN ST
ANYTOWN, ID 83000
MAILING ADDRESS
9XBBC25A4V999999
SERIAL NUMBER

208-555-5555
PHONE NUMBER
EMAIL ADDRESS

OWNER SIGNATURE Sally Sample

FEES: Registration* $ 10.50
Vendor 1.50
TOTAL $ 12.00
* Includes $1.00 for Idaho Department of Lands and $1.00 for law enforcement.

ISSUE DATE 6/12/13 STICKER NUMBER M13-002468

VENDOR NUMBER 10-0111 VENDOR INITIALS NP

THREE-PART **OFF-HIGHWAY VEHICLE (OHV)** REGISTRATION FORM

PLEASE ***PRINT CAREFULLY AND CLEARLY***!!
IDPR STAFF MUST BE ABLE TO READ AND ENTER INFORMATION WRITTEN ON THE REGISTRATION FORM INTO THE RIS DATA BASE.

ACTION: Mark the appropriate box.

A **transfer** is required when a motorbike, ATV, UTV, or SOHV that is registered for the **current year** is sold and the new owner needs to transfer the registration into their name. All transfers of ownership require a transfer of title. The buyer should have a bill of sale and preferably the transfer section on the back of the registration form completed. The title transfer may only be done at the County MVD. Sales tax may be paid at that time. A bill of sale or proof of ownership is required. Only the owner information changes. The sticker number is the same. **Please DO NOT issue a new sticker.**

A **replacement** is for a sticker that is lost or destroyed. Before you issue a replacement validation sticker and a registration, make sure the machine is registered for the current year. The owner may show you the registration form or you may call IDPR for confirmation. Once verified, complete a new registration form with the same information as the original.

An **exempt** registration is for vehicles used exclusively on private land for agricultural use or used exclusively for snow removal purposes. It is also used for vehicles operated by law enforcement or government agencies.

REGISTRATION TYPE: Mark the appropriate box.

- "**Motorbike**" means any self-propelled two (2) wheeled motorcycle or motor-driven cycle, excluding tractor, designed for or capable of traveling off developed roadways and highways and also referred to as trailbikes, enduro bikes, trials bikes, motocross bikes or dual purpose motorcycles.
- "All-terrain vehicle (**ATV**)" means any recreation vehicle with three (3) or more tires, under nine hundred (900) pounds and fifty (50) inches or less in width, having a wheelbase of sixty-one (61) inches or less, has handlebar steering and a seat designed to be straddled by the operator.
- "Utility type vehicle (**UTV**)" means any recreational motor vehicle other than an ATV, motorbike or snowmobile as defined in this section, designed for and capable of travel over designated roads, traveling on four (4) or more tires, maximum width less than seventy-four (74) inches, maximum weight less than two thousand (2,000) pounds, and having a wheelbase of one hundred ten (110) inches or less. A utility type vehicle must have a minimum width of fifty (50) inches, a minimum weight of at least nine hundred (900) pounds or a wheelbase of over sixty-one (61) inches. Utility type vehicle does not include golf carts, vehicles specially designed to carry a disabled person, implements of husbandry as defined in section 49-110(2), Idaho Code, or vehicles otherwise registered under title 49, Idaho Code. A "utility type vehicle" or "UTV" also means a recreational off-highway vehicle or ROV.
- "Specialty off-highway vehicle (**SOHV**)" means any vehicle manufactured, designed or constructed exclusively for off-highway operation that does not fit the definition of an all-terrain vehicle, utility type vehicle or motorbike as defined in this section.

Idaho Department of Parks and Recreation

RECREATIONAL REGISTRATION

This form must be carried on the off-highway vehicle herein described during operation

ACTION		TYPE	
☐ New	☒ Replacement Sticker	☐ Off-Highway Motorbike	
☐ Renewal		☐ ATV	☒ UTV
☐ Transfer	☐ Exempt	☐ Specialty Off-Highway Vehicle	

12/31/13
Expiration Date

M13-15432
Validation Sticker #

4XARH68A3837884 22
VIN

10
Primary Use Area County

2008 Pols Ranger Camo
Year Make Model Description

Loststicker, Kurt E 208-432-4321
Primary Owner Name (Last, First, MI) Phone #

123 Missing Ave Somewhere ID 83000
Mailing Address City State Zip

Loststicker, Mary A. ( )
Co-owner Name (Last, First, MI) Phone #

Kurt Loststicker
Applicant Must Sign To Be Valid

7 / 3 / 13
Date of Issue

10-0321
Vendor ID #

SKM
Agent Initials

FEES

Reg. Fee*:	$ 1.50
Vendor Fee:	$ 1.50
Total Fee:	$ 3.00

* Includes $1.00 for Idaho Department of Land and $1.00 for law enforcement.

Copy Distribution: WHITE - Owner, CANARY - Parks & Recreation, PINK - Vendor

Idaho Department of Parks and Recreation

RECREATIONAL REGISTRATION

This form must be carried on the off-highway vehicle herein described during operation

ACTION		TYPE	
☒ New	☐ Replacement Sticker	☐ Off-Highway Motorbike	
☐ Renewal		☒ ATV	☐ UTV
☐ Transfer	☐ Exempt	☐ Specialty Off-Highway Vehicle	

12/31/13
Expiration Date

M13-98765
Validation Sticker #

1HFTE21008471 2039
VIN

14
Primary Use Area County

2008 Honda TRX250 Red
Year Make Model Description

Biker, Tom F
Primary Owner Name (Last, First, MI)

(208) 123-4567
Phone #

999 Fast Ln Anywhere ID 83000
Mailing Address City State Zip

Biker, Sally J
Co-owner Name (Last, First, MI)

( )
Phone #

Sally J. Biker
Applicant Must Sign To Be Valid

3/18/13
Date of Issue

01-0123
Vendor ID #

SLD
Agent Initials

FEES

Reg. Fee*:	$ 10.50
Vendor Fee:	$ 1.50
Total Fee:	$ 12.00

* Includes $1.00 for Idaho Department of Land and $1.00 for law enforcement.

Copy Distribution: WHITE - Owner, CANARY - Parks & Recreation, PINK - Vendor

EXPIRATION DATE: 12/31/2013

VALIDATION STICKER: This is the number on the sticker you sell them.

VIN/HIN: This is where the serial number goes. **IT IS VERY IMPORTANT TO HAVE THIS NUMBER CORRECT.** Please check the motorbike, ATV or UTV for accuracy and list the complete number. This number may be used to identify a stolen machine or a missing owner.

PRIMARY USE AREA COUNTY: Enter the 2-digit code for the county the customer chooses as his or her primary use area. This designation will be used as part of the formula for distributing the $1.00 for OHV law enforcement activities.

01 Ada	12 Butte	23 Gem	34 Minidoka
02 Adams	13 Camas	24 Gooding	35 Nez Perce
03 Bannock	14 Canyon	25 Idaho	36 Oneida
04 Bear Lake	15 Caribou	26 Jefferson	37 Owyhee
05 Benewah	16 Cassia	27 Jerome	38 Payette
06 Bingham	17 Clark	28 Kootenai	39 Power
07 Blaine	18 Clearwater	29 Latah	40 Shoshone
08 Boise	19 Custer	30 Lemhi	41 Teton
09 Bonner	20 Elmore	31 Lewis	42 Twin Falls
10 Bonneville	21 Franklin	32 Lincoln	43 Valley
11 Boundary	22 Fremont	33 Madison	44 Washington

YEAR-MAKE-MODEL-DESCRIPTION: Enter the year, make and model of the vehicle. This information will add to a full description of this unique machine. These are also very important for ownership identification as well as reporting stolen machines.

OWNER NAME, ADDRESS, PHONE #, CO-OWNER NAME: Please print carefully, last name first, full mailing address and zip code. Be sure to include the area code when the telephone number is completed.

DATE OF ISSUE: The date of the sale.

VENDOR NUMBER: Your assigned number.

AGENT INITIALS: Your initials.

OHV REGISTRATION FEES

OHV FEE:	$10.50
VENDOR FEE:	1.50
TOTAL FEE:	$12.00
MOTORBIKE/ATV/UTV TRANSFER FEE:	$ 1.50
VENDOR FEE:	1.50
TOTAL FEE:	$ 3.00
MOTORBIKE/ATV/UTV REPLACEMENT FEE:	$ 1.50
VENDOR FEE:	1.50
TOTAL FEE:	$ 3.00
MOTORBIKE/ATV/UTV EXEMPT FEE:	$ 0
VENDOR FEE:	0
TOTAL FEE:	0

OHV Law Enforcement Designation Locations

On your registration form, designate a county to receive
$1 for OHV Law Enforcement.

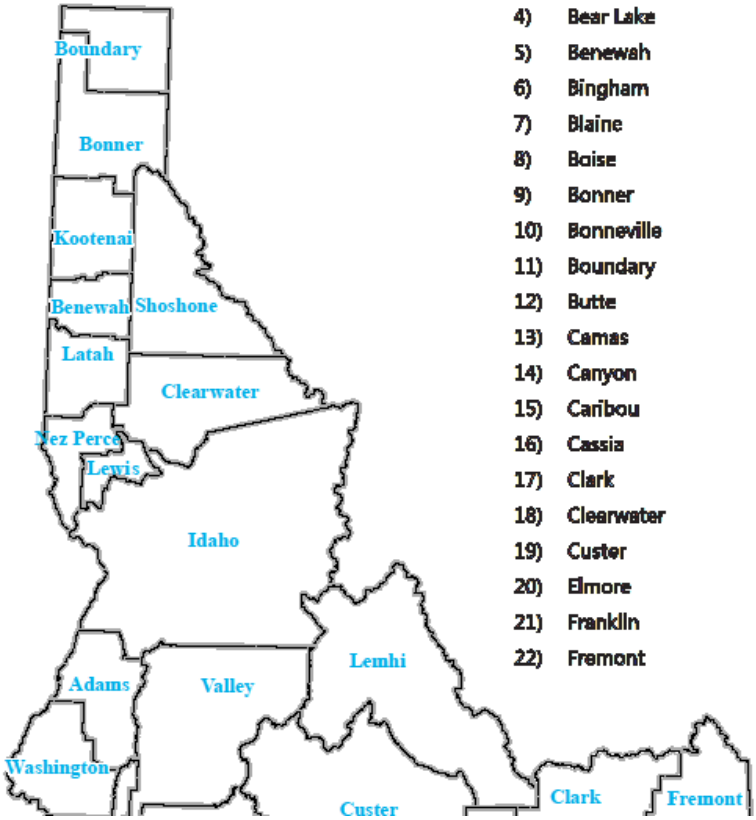

Idaho Counties

1)	Ada	23)	Gem
2)	Adams	24)	Gooding
3)	Bannock	25)	Idaho
4)	Bear Lake	26)	Jefferson
5)	Benewah	27)	Jerome
6)	Bingham	28)	Kootenai
7)	Blaine	29)	Latah
8)	Boise	30)	Lemhi
9)	Bonner	31)	Lewis
10)	Bonneville	32)	Lincoln
11)	Boundary	33)	Madison
12)	Butte	34)	Minidoka
13)	Camas	35)	Nez Perce
14)	Canyon	36)	Oneida
15)	Caribou	37)	Owyhee
16)	Cassia	38)	Payette
17)	Clark	39)	Power
18)	Clearwater	40)	Shoshone
19)	Custer	41)	Teton
20)	Elmore	42)	Twin Falls
21)	Franklin	43)	Valley
22)	Fremont	44)	Washington

COMPLETING MONTHLY TRANSMITTALS

A **transmittal must be completed** and money sent to IDPR **once a month**. If no sales occur during the month, send a "No Sales Card". The transmittal or card must reach IDPR by the **15th of the month** following the sale. IDPR will hold requests for additional stickers until monthly transmittals are current.

Fill in your vendor number, (for example 01-0123) and your Business name.

The reporting period is the month in which sales were made.

Organize all of the Part A forms received and the yellow registrations in sticker number order and list the beginning and ending numbers of each continuous group. If for some reason there is a gap in the sequence, list the groups separately and tell us as best you can what happened to the missing stickers. IDPR will make the necessary adjustments to your inventory. While you are looking at the Parts A and the yellow copies **verify there is a sticker number on each form** and confirm each form is completed correctly and legibly.

Count the registrations. Simply subtracting the beginning number from the ending number doesn't work! For example:

	S13-0130	
	- S13-0126	There are actually five stickers;
	= 4	126, 127, 128, 129, 130.

Enter the number issued and the total amount collected for that series in the right hand columns and bring down the totals.

Include the vendor fee in all the transactions except exempt stickers.

Then, bring down the total amount collected, subtract the total vendor fee and send one check for the Amount To Remit. Once again, do not subtract a vendor fee for exempt registrations.

If you need stickers or have questions please contact IDPR by phone or e-mail. **DO NOT WRITE ORDERS** on your transmittal as it causes delays in getting the stickers sent out to you.

CONTACT INFORMATION: REGISTRATION SECTION
1-208-334-4197 or 1-800-247-6332
E-MAIL: reghelpline@idpr.idaho.gov

STATE OF IDAHO

SNOWMOBILE REGISTRATION TRANSMITTAL

E-mail: reghelpline@idpr.idaho.gov

VENDOR#: 01-0234 VENDOR NAME: Joe's Snowmobile Sales

REPORTING PERIOD: 01-01-13 TO 01-31-13

RESIDENT VALIDATION STICKERS ISSUED:		#Issued	$ Amount
Series S13-01567	thru S13-01571	5	$ 162.50
Series S13-01573	thru	1	$ 32.50
Series	thru		$

NON-RESIDENT VALIDATION STICKERS ISSUED:		#Issued	$ Amount
Series N13-01234	thru N13-01240	7	$ 227.50
Series	thru		$

RENTAL VALIDATION STICKERS ISSUED:		#Issued	$ Amount
Series R13-05678	thru R13-05683	6	$ 375.00
Series	thru		$

TRANSFERS, REPLACEMENTS, EXEMPTS, VOIDS:		
S13-01566 (duplicate)	1	$ 4.50
		$

TOTALS	20	$ 802.00

TOTAL AMOUNT COLLECTED	$ 802.00
LESS VENDOR FEE (# ISSUED x $1.50)	$ 30.00
AMOUNT TO REMIT	$ 772.00

DATE 2-4-13 PREPARED BY Joe Snow

WHITE COPY - Idaho Department of Parks & Recreation (with registrations) YELLOW COPY - Retain for your files

STATE OF IDAHO

PARK N' SKI REGISTRATION RECEIPT TRANSMITTAL

E-mail: reghelpline@idpr.idaho.gov

VENDOR #: 01-0123 VENDOR NAME: Cross Country Heaven PREPARED BY ANC

REPORTING PERIOD: 01-01-13 TO 01-31-13 DATE 02-07-13

I. ANNUAL PARK N' SKI STICKERS:		# Issued	$ Amount
Series X13-376	thru X13-382	7	$ 175.00
Series X13-384	thru X13-386	3	$ 75.00
Series	thru		$
Series	thru		$
TOTALS		10	$ 250.00

II. TEMPORARY PARK N' SKI TAGS:		# Issued	$ Amount
Series Y13-120	thru Y13-122	3	$ 22.50
Series Y13-124	thru	1	$ 7.50
Series	thru		$
Series	thru		$
TOTALS		4	$ 30.00

TOTAL AMOUNT COLLECTED	$ 250.00
LESS VENDOR FEE (# ISSUED x $1.00)	(-) 10.00
AMOUNT TO REMIT ANNUAL STICKERS	$ 240.00

TOTAL AMOUNT COLLECTED	$ 30.00
LESS VENDOR FEE (# ISSUED x $1.00)	(-) 4.00
AMOUNT TO REMIT TEMPORARY TAGS	$ 26.00

TOTAL REMITTED $ 266.00

WHITE COPY - Idaho Department of Parks & Recreation (with registrations)

YELLOW COPY - Retain for your files

STATE OF IDAHO

BOAT REGISTRATION TRANSMITTAL

E-mail: reghelpline@idpr.idaho.gov

VENDOR#: 04-0123 VENDOR NAME: Bob's Boats

REPORTING PERIOD: 01-01-13 TO 01-31-13

REGISTRATION NUMBERS ISSUED: **# Issued**

Series 1D1234AS thru 1D1235AS 2

Series _____ thru _____ _____

VALIDATION STICKERS ISSUED: **#Issued** **$ Amount**

Series B13-53180 thru B13-53186 7 $ 254.50

Series _____ thru _____ _____ $ _____

Series _____ thru _____ _____ $ _____

Series _____ thru _____ _____ $ _____

TRANSFERS, REPLACEMENTS, EXEMPTS, VOIDS:

B13-53179 (Replacement) 1 $ 4.50

_____ _____ $ _____

_____ _____ $ _____

TOTALS 8 $ 259.00

TOTAL AMOUNT COLLECTED $ 259.00

LESS VENDOR FEE (# ISSUED x $1.50) $ 12.00

AMOUNT TO REMIT $ 247.00

DATE 2/6/13 **PREPARED BY** Bob Boats

WHITE COPY - Idaho Department of Parks & Recreation (with registrations)

YELLOW COPY - Retain for your files

STATE OF IDAHO

IDAHO INVASIVE SPECIES TRANSMITTAL

E-mail: reghelpline@idpr.idaho.gov

VENDOR#: 02-0234 VENDOR NAME: Vikki Vendor Boat Shop

REPORTING PERIOD: 7-1-13 TO 7-31-13

INVASIVE SPECIES - NON-MOTORIZED:		#Issued	$ Amount
Series G13-0001	thru G13-0005	5	$ 35.00
Series	thru		$
Series	thru		$
Series	thru		$
Series	thru		$

INVASIVE SPECIES - NOT REGISTERED IN IDAHO:		#Issued	$ Amount
Series A13-0010	thru A13-0016	7	$ 154.00
Series	thru		$
Series	thru		$
Series	thru		$
Series	thru		$

INVASIVE SPECIES - REPLACEMENTS OR VOIDS:	#Issued	$ Amount
		$
A13-0017 (Replacement)	1	$ 3.00
		$
		$
		$

TOTALS	13	$ 192.00
TOTAL AMOUNT COLLECTED		$ 192.00
LESS VENDOR FEE (# ISSUED x $1.50)		$ 19.50
AMOUNT TO REMIT		$ 172.50

DATE 8/3/13 PREPARED BY Vikki Vendor

WHITE COPY - Idaho Department of Parks & Recreation (with registrations) YELLOW COPY - Retain for your files

STATE OF IDAHO

MOTORBIKE/ATV/SOH & UTV REGISTRATION TRANSMITTAL

E-mail: reghelpline@idpr.idaho.gov

VENDOR#: 01-0678 VENDOR NAME: Joe's Cycle Shop

REPORTING PERIOD: 1-1-13 TO 1-31-13

VALIDATION STICKERS ISSUED:		#Issued	$ Amount
Series M13-005667	thru M13-005673	7	$ 84.00
Series M13-005675	thru M13-005678	4	$ 48.00
Series	thru		$
Series	thru		$
Series	thru		$
Series	thru		$
Series	thru		$
Series	thru		$
Series	thru		$
Series	thru		$

TRANSFERS, REPLACEMENTS, EXEMPTS, VOIDS:		
M13-005674 (Duplicate)	1	$ 3.00
M13-010203 (Transfer)	1	$ 3.00
		$

TOTALS	13	$ 138.00
TOTAL AMOUNT COLLECTED		$ 138.00
LESS VENDOR FEE (# ISSUED x $1.50)		$ 19.50
AMOUNT TO REMIT		$ 118.50

DATE 2/2/13 PREPARED BY Joe Cycle

WHITE COPY - Idaho Department of Parks & Recreation (with registrations)

YELLOW COPY - Retain for your files

VENDOR APPLICATION

IDAHO DEPARTMENT OF PARKS AND RECREATION
RECREATIONAL REGISTRATION

REGISTRATION TYPE:

( ) BOAT ( ) SNOWMOBILE ( ) OFF-HIGHWAY VEHICLE
( ) WINTER RECREATION PARKING PERMIT ( ) INVASIVE SPECIES

VENDOR'S BUSINESS NAME:

_____

LOCATION ADDRESS:

_____

MAILING ADDRESS:

_____

TELEPHONE #_____ CONTACT PERSON_____

FAX #:_____ E-MAIL ADDRESS_____

NAME, ADDRESS, TELEPHONE # OF OWNER, PARTNER, OR CORPORATE OFFICER

_____

TYPE OF BUSINESS

_____

BUSINESS
HOURS/DAYS_____

HAS THE BUSINESS PREVIOUSLY BEEN A VENDOR? YES ( ) NO ( )

IS THERE ANY REASON THE BUSINESS COULD NOT BE BONDED? YES ( ) NO ( )

IF YES, EXPLAIN:_____

_____

CREDIT REFERENCES:

BANK:_____ ACCOUNT #_____

OTHER_____

OTHER_____

DATE _____ SIGNATURE_____

TITLE_____

MEMORANDUM OF AGREEMENT

THIS AGREEMENT is made and entered into this _____ day of _____, _____, by and between the Idaho Department of Parks and Recreation, an agency of the state of Idaho, hereinafter referred to as the Department, and _____ whose address is _____ hereinafter called the Vendor.

WITNESSETH:

In consideration of the mutual covenants and agreements herein contained, the parties hereto agree as follows:

I.

The Department, by and through the Director thereof, does hereby select and designate Vendor to serve as the Department's agent for the purpose of selling Idaho Recreational certificate of Registrations at the address of the Vendor hereinabove set forth.

II.

Vendor is hereby authorized to sell certificates of Registration with validation stickers for:

___Boats ____Snowmobiles ___Off-Road Vehicles

___Winter Recreation Parking Permits (Park and Ski) ___Invasive Species

Inclusively hereinafter referred to as registrations.

This contract may be modified by the addition of approved vendor activity by so noting on the face of the original contract, with both signatories initialing and dating the change.
Vendor accepts such selection and designation and understands and agrees that Vendor will be entitled to charge the purchaser of a registration a handling fee as compensation as prescribed by Idaho Code.

III.

Department will train and instruct Vendor in the proper procedure of sale of registrations and will furnish to the Vendor any existing rules and regulations which shall be periodically updated as necessary.

IV.

Vendor agrees to abide by the terms of this agreement and any and all rules, regulations, or policies established by the Department, which rules, regulations, and policies are incorporated herein as terms of this agreement.

V.

The registrations and the proceeds of any sale thereof are, at all times, to be and remain the Department's sole and exclusive property subject to the Department's orders and directions and free from any and all claims and demands of vendor whatsoever except as to the compensation to be received by Vendor as hereinabove provided. Certain penalties are prescribed pursuant to Idaho Code 18-5701, regarding improper handling of such proceeds of sale. Anyone convicted under this statute may be imprisoned in the state prison for not less than one (1) nor more than ten (10) years.

VI.

Vendor, at Vendor's own cost and expense, agrees to keep said registrations and validation stickers in a safe and secure place to preclude the possibility of theft, vandalism, or loss by whatever means.

VII.

Vendor will submit a report to the Department, on or before due date (15th) of each and every month, on a form to be provided by the Department. The report will include, in numerical sequence, all registrations sold or voided, or a statement showing no sales, and there will be attached to said report a single check for the proceeds of sales of
registrations occurring between the report dates.

VIII.

Vendor agrees to return all unsold registrations and validation stickers to the Department upon its request and to pay to the Department the full value for any and all unaccounted for registrations and validation stickers.

IX.

Vendor agrees to permit the Department or its agent to enter his premises at all reasonable times for the purpose of inspecting and auditing the fiscal records of Vendor covering the sale of said registrations.

X.

Vendor agrees that this agreement, and the rights and duties hereunder cannot be sold, assigned, or transferred, and any attempt to sell, assign, or transfer the rights and duties under this Agreement will be absolutely void.

XI.

Vendor agrees that failure to comply with the provisions of this agreement will cause for suspension or termination of vendorship rights.

XII.

Department and Vendor agree that in the performance of services compensated by this Agreement that the Vendor is not an employee of the State of Idaho, and that, as such, Department will not be expected to and will not withhold taxes, insurance, or deductions normally withheld from the salaries of the employees of the State of Idaho.
Further, that the general statutes of the state of Idaho relating to employees and employment security, conduct and activity will not be applicable to the Vendor under this Agreement and the services to be rendered pursuant to this Agreement.

This agreement is terminable by either party upon 30 days written notice, except that the Department may cancel this contract with no notice if Vendor is suspended or terminated pursuant to IDAPA 26.15.8.
IN WITNESS WHEREOF, the parties hereto have affixed their signatures as of the day and year first above written.

NANCY C. MERRILL, DIRECTOR
IDAHO DEPT. OF PARKS AND RECREATION
State of Idaho

VENDOR

_____ BY:

_____
Business Registration Section Supervisor

_____
Address

_____
City State ZIP

BY

_____
Signature

IDAPA 26
TITLE 01
CHAPTER 03

26.01.03 - RULES GOVERNING RECREATIONAL REGISTRATION VENDORS

000. LEGAL AUTHORITY.
The Parks and Recreation Board, State of Idaho, acting pursuant to the Administrative Procedures Act, Title 67, Chapter 52, Idaho Code, and its powers and responsibilities under the Parks and Recreation Act, Title 67, Chapter 42, Idaho Code, adopted the following rules. These rules are promulgated under the Department's authority to administer the following Acts: Recreational Activities, Sections 67-7101 through 67-7133, Idaho Code, and Idaho Safe Boating Act, Section 67-7001 et seq., Idaho Code. These rules are intended to set forth the procedures for vendors to apply to sell recreational registrations for the Idaho Department of Parks and Recreation and to set forth procedures necessary to effect consistent, effective and efficient operation and management of the recreational registration program.

001. -- 002. (RESERVED).

003. APPEALS.
All decisions of denial are considered final unless appealed pursuant to **IDAPA** 26.01.01.250, "Rules of Administrative Procedure of the Idaho Park and Recreation Board," within thirty (30) days.

004. -- 009. (RESERVED).

010. DEFINITION OF TERMS.

01. Application. A form prescribed and furnished to prospective vendors by the Department.

02. Department or Central Office. The Idaho Department of Parks and Recreation. Location: 5657 Warm Springs Avenue, Boise, Idaho, 83716; Mailing Address: Statehouse Mail, Boise, Idaho 83720; Phone: 208-334-4199.

03. Memorandum of Agreement. A contract between the Department and the Vendor.

04. Recreational Registrations. Registration of various recreational vehicles, which includes, but is not limited to, snowmobiles, boats, off-road motorbikes, and recreational activities such as use of Park 'N' Ski facilities.

05. Vendor. Any business authorized to sell recreational registration licenses.

06. Vendor Policy Manual. A policy manual setting forth guidelines for selling recreational registration licenses.

011. -- 049. (RESERVED).

050. DEPARTMENT RESPONSIBILITIES.
The Department has the responsibility to provide, but is not limited to providing the following:

01. Reporting Procedures. Effective and efficient reporting procedures.

02. Training. Training and assistance for vendor problem areas.

03. Supplies. Maintenance of adequate supplies provided on a timely basis.

04. Internal Control. Maintenance of adequate internal controls to ensure system integrity.

051. -- 099. (RESERVED).

100. CRITERIA FOR APPLYING FOR VENDORSHIP.
A prospective vendor may apply to sell one (1) or more types of registrations. A prospective vendor may make a request

to the Department at any time by phone, mail, or in person to receive Vendor Application forms and a copy of the applicable vendor Memorandum of Agreement. The application and the signed Memorandum of Agreement must be completed in full and returned to the Department for approval. If approved by the Department, the vendorship will be effective upon issuance of the signed Memorandum of Agreement by the Licensing Section, Department of Parks and Recreation.

101. -- 149. (RESERVED).

150. MINIMUM QUALIFICATIONS OF VENDORS.

01. Established Business. The prospective vendor's business must be known as an established business in the general area they will serve and they may need to provide additional references to establish, to the department's satisfaction, the likelihood of an ongoing business operation. No vendor will be given an exclusive territory or area in which to sell registrations and licenses.

02. Taxes And Fees. The applicant must not be delinquent in payment of any taxes or fees to the state of Idaho or any subdivision thereof.

03. Operating Hours. The location of the business and hours of operation must be such that registration will be available to registrants at a convenient time and place.

04. Service. Every effort will be made by the applicant to provide satisfactory service to both registrants in issuing registrations and the Department in properly collecting fees, safeguarding supplies and reporting in a timely, accurate manner.

05. Bonding. When applicable, a vendor must be bondable to the extent that his gross fees collected will exceed one thousand dollars ($1,000); such bond to be provided by the Department.

06. Nondiscrimination. Vendors shall not discriminate against any registrant on the basis of race, religion, or nationality or gender.

151. -- 199. (RESERVED).

200. NOTIFICATIONS AND TIME LIMITS.

01. Action on Application. The Department shall provide written notification within thirty (30) days following receipt of a vendor application and contract as to the approval or denial of same. Delivery at the central office of the Department shall constitute receipt of the documents. This decision for approval or denial shall be based on the rules contained herein and or such other procedures as are considered necessary by the Department.

02. Notification. If approved, a fully executed copy of the vendor contract will be returned to the vendor. If denied, notification will outline reasons for such denial.

201. -- 249. (RESERVED).

250. VENDOR SUSPENSION AND TERMINATION.

01. Suspension. A vendor may be suspended from selling registrations for up to one (1) year for:

a. Failure to file a sales report on or before the date required by law, even if there were no registrations sold.

b. Filing of inaccurate or incorrect reports.

c. Failure to issue registrations in accordance with the provisions of Idaho Code, the Vendor Memorandum of Agreement and procedures, policies and instructions of the Department.

02. Termination. A vendor may be terminated permanently for:

a. Being suspended twice in any three (3) year period.

b. Breach of the vendor Contract.

c. Remitting fees with a nonsufficient funds check which is not due to bank error.

d. A volume of ten (10) or less registrations, or total lack of sales, for a one (1) year period.

e. Refusal to remit fees collected or return voided or unused sticker.

f. Use of unacceptable or unbusiness-like conduct toward a registrant.

251. -- 299. (RESERVED).

300. VENDOR FEES.
In order to establish consistency in vendor registration fees, vendors are strongly encouraged to charge the maximum allowable vendor fee as established under appropriate statutes as outlined in Section 000 of this chapter, and to notify the Department of vendor's intent to reduce the fee. The fee must remain consistent for a full season or program year, and changes must be approved by the Department in advance.

301. -- 349. (RESERVED).

350. DEPARTMENT RESERVES EXCLUSIVE RIGHT TO RENEW REGISTRATIONS BY MAIL.
The Department reserves the exclusive right to mail out requests for renewal on all registrations which it is authorized to administer. This does not preclude vendors from making arrangements with registrants who may be physically removed from their place of residence at a time when re-registration becomes necessary. To perform such re-registration as a service to that patron, vendor should follow the procedures as outlined in the Vendor Policy Manual.

351. -- 399. (RESERVED).

400. VENDORS TO OBTAIN EVIDENCE OF OWNERSHIP PRIOR TO ISSUING REGISTRATIONS.
Vendors must take reasonable care that adequate evidence of ownership is presented prior to registration. Prior registration is sufficient evidence.

401. -- 999. (RESERVED).

Subject Index

A
Action On Application, Recreational Registration Vendor
B
Bonding, Minimum Qualifications of Vendors
C
Criteria For Applying For Vendorship
D
Definition Of Terms
Department Reserves Exclusive Right To Renew Registrations By Mail
Department Responsibilities
Department or Central Office
E
Established Business, Minimum Qualifications of Vendors
M
Memorandum of Agreement
Minimum Qualifications of Vendors
N
Nondiscrimination, Minimum Qualifications of Vendors
Notification, Notifications & Time Limits
Notifications & Time Limits
O
Operating Hours, Minimum Qualifications of Vendors
R
Recreational Registrations
S
Suspension, Vendor Suspension & Termination
T
Taxes & Fees, Minimum Qualifications of Vendors
Termination, Vendor Suspension &
Termination
V
Vendor
Vendor Fees
Vendor Policy Manual

TITLE 67
STATE GOVERNMENT AND STATE AFFAIRS
CHAPTER 70
IDAHO SAFE BOATING ACT

67-7001.PURPOSE. It is hereby declared to be the policy of the state of Idaho to improve boating safety, to foster the greater development, use and enjoyment of the waters of this state by watercraft and to adopt certain standards for the safe operation and equipment of vessels. This chapter may be known and shall be cited as the "Idaho Safe Boating Act."

67-7002.JURISDICTION AND AUTHORITY. This chapter shall apply to all vessels operated on the waters of and over which the state of Idaho shall have jurisdiction. The department is hereby granted authority to carry out the administration of the provisions of this chapter, and to promulgate rules and regulations in compliance with chapter 52, title 67, Idaho Code, to effectuate that purpose.

67-7003.DEFINITIONS. In this chapter:

(1) "Actual physical control" means being in the operator's position of the vessel with the motor running or with the vessel moving.

(2) "Aids to navigation" means such buoys, batons, markers or other fixed objects in the water which are established and used to mark obstructions or to direct navigation through separate channels.

(3) "Authorized vendor" means a retail/commercial enterprise or government office authorized by the department to sell certificates of registration as provided in section 67-7008, Idaho Code.

(4) "Boating law administrator" means the staff person of the Idaho department of parks and recreation appointed by the director and who supervises the boating program.

(5) "Commercial vessel" means any vessel used in the carriage of any person, persons or property for a valuable consideration, whether directly or indirectly flowing to the owner, partner, agent or any other person interested in the vessel.

(6) "Department" means the Idaho department of parks and recreation.

(7) "Director" means the director of the Idaho department of parks and recreation.

(8) "Float house" means a floating structure which is designed and built to be used, or is modified to be used, as a stationary waterborne residential dwelling, has no mode of power of its own, is dependent for utilities upon a continuous utility linkage to a source originating on shore, and has a permanent continuous connection to a sewage system on shore.

(9) "Float tube" means any vessel constructed of canvas, nylon or other material encasing an inflatable inner tube which allows the operator to sit inside with his legs dangling below the vessel.

(10) "Length of vessel" means the distance measured at the centerline at the highest point above the waterline from the fore-part of the outer hull at the bow to the aft-part of the outer hull at the stern, excepting any bowsprits, railings or extraneous or additional equipment.

(11) "Manufacturer" means any person who is engaged in the business of manufacturing or importing new and unused vessels for the purpose of sale or trade.

(12) "Operate" means to navigate or otherwise use a vessel on the water of this state.

(13) "Operator" means any person who controls the direction or propulsion of any vessel on the water of this state.

(14) "Owner" means any person having a property interest in or entitled to the use or possession of a vessel, including a person entitled to use or possession subject to the interest in another person reserved or created by agreement and securing payment of performance of an obligation, but not including a lessee under lease not intended as security.

(15) "Passenger" means every person carried aboard a vessel other than:

(a) The owner or his representative;

(b) The operator;

(c) A bona fide member of the crew engaged in the business of the vessel who has contributed no consideration for carriage and who is paid for his services; or

(d) Any guest on board a vessel which is used exclusively for pleasure purposes who has not contributed any consideration directly or indirectly for his carriage.

(16) "Person" means any individual, firm, partnership, corporation, company, association, joint stock

association, or body politic, except the United States and the state of Idaho, and includes any agent, trustee, executor, reserve assignee or similar representative of any of the above.

(17) "Personal watercraft" means a small vessel which uses an outboard motor or an inboard motor powering a water jet pump as its primary source of power and is designed to be operated by a person sitting, standing or kneeling on, rather than in the conventional manner of sitting or standing inside the vessel.

(18) "Private label merchandiser" means any person engaged in the business of selling or distributing, under his own trade name, vessels manufactured by another.

(19) "Regatta," "Race," "Marine Event," "Tournament," or "Exhibition" means an organized water event of limited duration which is conducted according to a prearranged schedule.

(20) "Regulatory markers" means any fixed or anchored aid to navigation which is established and used, but is not limited to, the bathing beach markers, speed zone markers, information markers, swimming or diving markers, floating mooring buoys, fishing buoys or markers for ski courses or jumps.

(21) "Rules of the road" means the statutory and regulatory rules governing the navigation of vessels as published by the United States Coast Guard in Navigational Rules International -- Inland.

(22) "Vessel" means every description of watercraft, including a seaplane on the water, used or capable of being used as a means of transportation on water, but does not include float houses, diver's aids operated and designed primarily to propel a diver below the surface of the water, and nonmotorized devices not designed or modified to be used as a means of transportation on the water, such as inflatable air mattresses, single inner tubes, and beach and water toys.

(23) "Water of this state" means any waters in the state of Idaho over which the state has jurisdiction.

67-7004.HULL IDENTIFICATION NUMBER. (1) All vessels, except seaplanes, shall have two (2) identical hull identification numbers permanently displayed and affixed in accordance with federal regulations.

(2) A person who builds or imports a vessel for his own use and not for the purposes of sale shall request a hull identification number from the director and affix the number as instructed.

(3) No person shall destroy, remove, alter, or cover a vessel hull identification number.

(4) The director may issue a hull identification number for any vessel in violation of the provisions of this section.

67-7005.CAPACITY PLATE AND CERTIFICATION. All vessels, except seaplanes, constructed after November 1, 1972, and manufactured in or used on the waters of this state and under twenty (20) feet in length, except sailboats, canoes, kayaks and inflatable boats, shall have a certification and capacity plate permanently affixed to the vessel at a location so as to be clearly visible and legible from the position designed or normally intended to be occupied by the operator of the vessel when it is underway in the water.

67-7006.CAPACITY PLATE -- CONTENTS. A capacity plate shall bear the following information permanently marked thereon:

(1) For all vessels designed for or represented by the manufacturer as being suitable for use with outboard motor:

(a) The total weight of person, motor, gear, and other articles placed aboard which the vessel is safely capable of carrying under normal conditions.

(b) The recommended number of persons commensurate with the weight capacity of the vessel and the presumed weight in pounds of each person. In no instance shall such presumed weight per person be less than one hundred fifty (150) pounds.

(c) Clear notice that the information appearing on the capacity plate is applicable under normal conditions and that the weight of the outboard motor and associated equipment is considered to be part of total weight capacity.

(d) The maximum horsepower of the motor the vessel is designed or intended to accommodate.

(2) For all other vessels to which this chapter applies:

(a) The total weight of persons, gear and other articles placed aboard which the vessel is safely capable of carrying under normal conditions.

(b) The recommended number of persons commensurate with the weight capacity of the vessel and the presumed weight in pounds of each such person. In no instance shall such presumed weight per person be less than one hundred fifty (150) pounds.

(c) Clear notice that the information appearing on the capacity plate is applicable under normal conditions.

67-7007.CERTIFICATION LABEL -- CONTENTS. The certification label shall contain the following information in letters no less than one-eighth (1/8) inch in height and the information letters shall contrast with the basic color of the label and identify:

(1) The name and address (city and state) of the manufacturer. If the vessel is manufactured outside the United States, the importer shall be considered the statutory manufacturer, and his name and U.S. address shall appear on the label; or, if the vessel is to be sold at retail by a private label merchandiser, then his name and address may appear on the label.

(2) A statement that:

(a) "This Boat (or Vessel) Complies With U.S. Coast Guard Safety Standards in Effect on (month and year of certification)" or;

(b) "This Boat (or Vessel) Complies With U.S. Coast Guard Safety Standards in Effect on the Date of Certification" and;

(c) If the vessel displays a stability warning label as required by federal law the certification label shall also show the words, "This Boat Complies With U.S. Coast Guard Safety Standards, Except Load Capacity, in Effect on the Date of Certification" (or the actual date of such certification).

(3) The display of the certification and the capacity information required by this chapter may be combined on one (1) label provided the two (2) information displays are separated by a prominent line or border and the capacity information is the most prominent by virtue of larger type face, bolder type face or contrasting color background.

(4) The information relating to capacity required by this chapter shall be determined by any of the methods and formulas used, recommended or recognized by the U.S. Coast Guard or any agencies successor thereto.

67-7008.CERTIFICATE OF REGISTRATION -- EXPIRATION -- FEES. (1) Within fifteen (15) days after purchase, or as otherwise herein provided, the owner of each vessel requiring numbering by the state of Idaho shall file an application for registration with an assessor or authorized vendor on forms provided by the department. The application shall be signed by the owner and shall be accompanied by the fee herein designated. Upon receipt of an application in approved form, and the appropriate fee, the assessor or authorized vendor shall enter the same upon the records of its office and issue to the applicant two (2) validation stickers and a certificate of registration stating the number issued to the vessel, the receipt of any fee paid and the name and address of the owner, and the assessor or authorized vendor shall forward to the department a duplicate copy. The owner shall paint on or permanently attach to each side of the bow of the vessel the registration number and validation sticker in a manner as may be prescribed by rules of the department in order that they may be completely visible, and the number shall be maintained in legible condition. The certificate of registration shall be pocket-size and shall be on board and available at all times for inspection on the vessel for which issued whenever that vessel is in operation, except that livery operators may have the rental agreement on board rented vessels in lieu of the certificate of registration.

(2) The owner of any vessel for which a current certificate of registration has been issued pursuant to any federal law or a federally approved numbering system of another state shall, if the vessel is operated on the waters of this state in excess of sixty (60) days, make application for a certificate of Idaho registration in the manner prescribed in this section.

(3) Each assessor and authorized vendor shall record, on a form provided by the department, the names of all owners of vessels who make application for certificates of registration, together with the amount of the fees paid by the owners. He shall, on or before the tenth of each month, forward to the department a duplicate copy of each record for the preceding month.

(4) All records of the department made or kept pursuant to this section shall be kept current and shall be public records.

(5) Every certificate of registration issued shall continue in full force and effect through December 31 of the year of issue unless sooner terminated or discontinued in accordance with law. Certificates of registration may be renewed by the owner in the same manner provided for in the initial securing of them.

(6) The owner of any vessel shall notify the department within fifteen (15) days if his vessel is destroyed or abandoned, or is sold or transferred either wholly or in part to another person or persons or if the owner’s address no longer conforms to the address appearing on the certificate of registration. In all such cases, the notice shall be accompanied by a surrender of the certificate of registration. When the surrender of the certificate is by reason of the vessel being destroyed, abandoned or sold, the department shall cancel the certificate and enter that fact in its records. If the surrender is by reason of a change of address on the part of the owner, the new address shall be endorsed on the certificate and the certificate returned to the owner.

(7) Whenever the ownership of a vessel changes, the purchaser shall, within fifteen (15) days after acquisition, make application to the department for transfer to him of the certificate of registration issued for the vessel, giving his name, address, and the number of the vessel and shall, at the same time, pay to the department a transfer fee of three dollars ($3.00). Upon receipt of the application and fee, the department shall transfer the certificate of registration issued for the vessel to the new owner or owners. Unless the application is made and the fee paid within fifteen (15) days, the vessel shall be considered to be without a certificate of registration.

(8) No number other than the registration number issued to a vessel or granted by reciprocity pursuant to law shall be painted, attached, or otherwise displayed on either side of the bow of the vessel.

(9) If any certificate of registration becomes lost, mutilated, or becomes illegible, the owner of the vessel for which the same was issued shall obtain a duplicate of the certificate from the department upon application and the payment of a fee of three dollars ($3.00). If one or both validation stickers are lost, stolen, or destroyed, any sticker remnants and the certificate of registration should be returned to the department along with a three dollar ($3.00) fee and an application for a duplicate certificate of registration and validation stickers.

(10) A person engaged in the manufacture or sale of vessels of a type otherwise required to be numbered by law, may obtain pursuant to regulations duly promulgated by the department, certificates of registration for use in the testing or demonstration only of a vessel upon payment of thirteen dollars ($13.00) for each certificate. Certificates of registration so issued may be used by the applicant in the testing or demonstration only of vessels by temporary placement of the numbers assigned by the certificates on the vessel tested or demonstrated, and shall be issued and displayed as otherwise prescribed by this chapter or by regulation of the department.

(11) The registration fees shall be:

(a) Vessels 0-12 feet in length: $20.00

Vessels over 12 feet in length: $20.00 plus $2.00 per foot for each additional foot in excess of 12 feet.

(b) The registration fees for new or used vessels which have not previously been registered in Idaho shall be:

(i) For vessels acquired or brought into the state January 1 through March 31, the full amount of the regular fees;

(ii) For vessels acquired or brought into the state April 1 through June 30, seventy-five percent (75%) of the regular fees;

(iii) For vessels acquired or brought into the state July 1 through September 30, fifty percent (50%) of the regular fees;

(iv) For vessels acquired or brought into the state after September 30, twenty-five percent (25%) of the regular fees.

(c) Each assessor and authorized vendor shall presume that any vessel is subject to the regular certificate of registration fees, unless the applicant can successfully show reasonable proof that the vessel has not previously been registered in Idaho.

(12) The provisions of subsection (11) of this section, with respect to the amount of payment of registration fees shall not apply to vessels owned by any charitable or religious organization, scout organization or any similar organization not used and operated for profit. All vessels currently registered by the state of Idaho and having paid the fees imposed by subsection (11) of this section shall not be assessed and taxed as personal property in the state of Idaho.

(13) The registration fee for vessels owned by any charitable or religious organization, scout organization or similar organization not used and operated for profit shall be two dollars ($2.00) per year.

67-7008A. ADDITIONAL FEES -- DEPOSIT INTO INVASIVE SPECIES FUND. (1) In addition to any other moneys or fees collected pursuant to the provisions of section 67-7008, Idaho Code, or any other provision of chapter 70, title 67, Idaho Code, all vessels shall pay an additional fee each calendar year as follows:

(a) Motorized vessels and sailboats:

(i) Ten dollars ($10.00) per vessel registered in the state of Idaho prior to launch into the public waters of the state;

(ii) Twenty-two dollars ($22.00) per vessel documented through the United States coast guard or registered outside the state of Idaho prior to launch into the public waters of the state.

(b) Nonmotorized vessels: Seven dollars ($7.00) per vessel prior to launch into the public waters of the state.

(c) Licensed outfitters, as defined in section 36-2102(b), Idaho Code, with nonmotorized fleets exceeding five (5) vessels shall be afforded a prorated group rate of thirty-two dollars ($32.00) for six (6) to ten (10) vessels; fifty-seven dollars ($57.00) for eleven (11) to twenty (20) vessels; and one hundred two dollars ($102) for twenty-one (21) or more vessels up to a maximum of one hundred (100) vessels. The fee for any

additional vessels shall be one dollar ($1.00) per vessel. The licensed outfitter group rates shall also be available for groups exempt from licensing pursuant to section 36-2103, Idaho Code.

(2) Upon payment of the fee as provided in this section, the payor shall be issued a protection against invasive species sticker that shall be displayed on the vessel in a manner as prescribed by the rules of the department. Stickers shall be considered in full force and effect through December 31 of the year of issue.

(3) Fees shall be collected by the department or authorized vendor.

(a) Vendors may retain one dollar and fifty cents ($1.50) of fees collected pursuant to this section except those collected pursuant to subsection (1)(a)(i) of this section.

(b) The department shall retain up to twenty percent (20%) of the fees for the actual costs of administering the sticker program.

(c) All remaining fees collected pursuant to this section shall be deposited in the invasive species fund established in section 22-1911, Idaho Code.

(d) For the purpose of this section, "vessel" is defined in section 67-7003(22), Idaho Code. All vessels are subject to the provisions of this section, with the exception of small rafts and other inflatable vessels less than ten (10) feet in length.

(4) If the protection against invasive species sticker is lost, stolen or destroyed, any sticker remnants shall be returned to the department along with a three dollar ($3.00) fee for a duplicate sticker.

(5) A person engaged in the manufacture or sale of vessels may obtain a sticker to be used in the testing or demonstration only of vessels by temporary placement of the protection against invasive species sticker on the vessel tested or demonstrated.

67-7009.EXEMPTION FROM NUMBERING PROVISIONS. A vessel shall not be required to be numbered under this chapter if it is:

(1) Already covered by a number in full force and effect which has been issued to it pursuant to federal law or a federally approved numbering system of another state, provided that such vessel shall not have been within this state for a period in excess of sixty (60) consecutive days.

(2) A vessel from a country other than the United States using the waters of this state for a period of less than sixty-one (61) consecutive days.

(3) A vessel which is owned by the United States, another state or a political subdivision thereof.

(4) A vessel's lifeboat.

(5) A vessel belonging to a class of vessels which has been exempted from numbering by the department after it has found that the numbering of vessels of such class will not materially aid in their identification and has further found that the vessel would also be exempt from numbering if it were subject to federal law.

(6) A float tube.

67-7010.UNNUMBERED VESSELS. (1) It shall be unlawful for an owner of a vessel to have such vessel on the waters of the state of Idaho, or for any person to operate or permit the operation of any vessel on the waters of the state of Idaho unless it shall have a current certificate of registration and display a registration number and current validation stickers as provided by law.

67-7012.ADVISORY COMMITTEE. The county commissioners of any county may appoint a waterways committee to serve without salary or wage in an advisory capacity relating to maintenance and improvement of waterways and expenditure of moneys deposited in the county vessel account. Members of this committee shall hold office at the pleasure of the board of county commissioners.

67-7013.REMITTANCE OF FEES. (1) There is established in the state treasury an account known as the "State Vessel Account," to which shall be credited:

(a) Moneys or fees collected by assessors and authorized vendors, under the provisions of this section and section 67-7008, Idaho Code; and

(b) All other moneys as may be provided by law.

(2) All fees collected by an assessor or authorized vendor under the provisions of section 67-7008, Idaho Code, shall be forwarded to the state treasurer not later than the fifteenth day of the month following the calendar month in which the fees were collected, and the state treasurer shall then pay the moneys collected into the state vessel account and the park and recreation account, as provided in subsection (3) of this section, unless otherwise provided by law.

(3) Moneys collected shall be deposited eighty-five percent (85%) to the state vessel account, and

fifteen percent (15%) to the park and recreation account established in section 67-4225, Idaho Code. The department shall remit the moneys apportioned to county units of government from the state vessel account not later than January 25, April 25, July 25 and October 25 of each year.

(4) All moneys deposited to the park and recreation account are to be appropriated for the purpose of defraying the expenses, debts and costs incurred in carrying out the powers and duties of the department as provided in this chapter, and for defraying administrative expenses of the department, including salaries and wages of employees of the department, expenses for traveling, supplies, equipment and other necessary expenses of the department as they relate to administration of this chapter. All claims against moneys apportioned to the park and recreation account shall be expended by the department and certified to the state controller, who shall, upon approval of the board of examiners, draw his warrant against the park and recreation account for all bills and claims allowed by the board. Should the related administrative costs of the department amount to less than the moneys apportioned to the park and recreation account for such purposes, the difference shall be remitted to the state vessel account and then apportioned to all counties with a boating improvement program so that the amount apportioned to each eligible county will be in the same ratio as the county's amount of funds received from the state vessel account during the prior fiscal year by a county bears to the total amounts received during that prior fiscal year by all eligible counties.

(5) All moneys deposited to the state vessel account and appropriated to the department, shall be apportioned among the counties of the state based on the designations which the owners make on their application for a certificate of registration.

(a) An owner, when purchasing a certificate of registration, will be allowed to designate, on the appropriate form, a primary and secondary eligible county where his boating activity occurs. The portion of his fees which are appropriated from the state vessel account shall be apportioned to the designated counties, with seventy percent (70%) of those fees apportioned to the primary designated county and thirty percent (30%) apportioned to the secondary designated county.

(b) Should an owner designate on the appropriate form only one (1) eligible county where his boating activity occurs, the full portion of his fees which are appropriated from the state vessel account shall be apportioned to the designated county.

(c) Should an owner fail to designate on the appropriate form any eligible county where his boating activity occurs, the full portion of his fees which are appropriated from the state vessel account shall be apportioned to all counties with a boating improvement program so that the amount apportioned to each eligible county will be in the same ratio as the county's amount of funds received from the state vessel account during the prior three (3) month payment period bears to the total amounts received during that prior three (3) month payment period by all eligible counties.

(6) Only those counties in the state with a boating improvement program, as recognized by the department, shall be eligible to receive moneys from the state vessel account. A "boating improvement program" means that one or more recognized boating facilities are being developed and/or maintained within the county's jurisdiction and/or that the county has or is actively developing a recognized boating law enforcement program.

(7) Moneys apportioned to the eligible counties shall be placed in and credited to an account which shall be known and designated as the county vessel fund, which shall be used and expended by the board of county commissioners for the protection and promotion of safety, waterways improvement, creation and improvement of parking areas for boating purposes, making and improving boat ramps and moorings, marking of waterways, search and rescue, and all things incident to such purposes including the purchase of real and personal property. The board of county commissioners is also authorized to use and expend funds from the county vessel fund outside the county when the board deems it advisable and for the public good.

(8) Within sixty (60) calendar days of the end of each county fiscal year, the county clerk shall calculate the ending fund balance of the county vessel fund for that fiscal year. If the ending fund balance is higher than the amount of revenues deposited in the county vessel fund from the state vessel account during that fiscal year, then the difference shall be remitted to the state vessel account within thirty (30) calendar days of that calculation. Moneys remitted to the state vessel account, in accordance with the provisions of this section, shall be apportioned to all counties with a boating improvement program so that the amount apportioned to each eligible county will be in the same ratio as the county's amount of funds received from the state vessel account during the prior county fiscal year bears to the total amounts received during that prior county fiscal year by all eligible counties. The provisions of this subsection shall not apply to specific sums of money in county vessel accounts, for which the county commissioners have given written notice, to the department of parks and recreation of an intention to retain those funds for a specific purpose. The notice shall specify the amount of the funds to be held, indicate the purpose for which the funds shall be utilized and provide the date when the funds will be expended. If an amended notice is not submitted by the county

commissioners, moneys not expended or contractually committed by the date stated in the original notice of the board of county commissioners shall revert to the state vessel account for distribution as provided in this subsection. All interest earned on moneys invested from a county vessel fund shall return to the county vessel fund.

67-7014.ADMINISTRATIVE FEES FOR VESSELS. (1) An administrative fee of not more than one dollar and fifty cents ($1.50) may be collected in addition to each vessel license tax collected under the provisions of section 67-7008, Idaho Code.

(2) When an assessor collects the fees, the administrative fee shall be paid to the county treasurer where the vessel is licensed and be placed in the county current expense fund for the purpose of defraying related administrative costs. The amount of the administrative fee to be collected by an assessor for each vessel shall be set by the respective boards of county commissioners conditioned on the annual budget request of their county assessor for the administration of vessel registration fees.

(3) When an authorized vendor collects the fees, the administrative fee shall be set and retained by the authorized vendor where the vessel is registered. The administrative fee shall be used to defray related administrative costs.

67-7015.SAFETY EQUIPMENT -- ADDITIONAL REGULATIONS. (1) The department is hereby authorized to promulgate rules and regulations establishing equipment requirements for any vessel subject to the provisions of law. Regulations shall be, wherever possible, in conformity with the provisions of the federal navigation laws or with navigation rules and regulations promulgated by the United States Coast Guard and shall be modified from time to time to maintain that conformity.

(2) It shall be unlawful for any person to operate or permit the operation of any vessel on the waters of the state of Idaho unless the vessel shall have on board or installed the equipment required by rules and regulations promulgated by the department.

67-7016.GROSSLY NEGLIGENT OPERATION. It shall be unlawful for any person to operate any vessel on the waters of the state of Idaho in such a manner as to endanger the life or limb, or damage the property of any person, and whosoever shall do so is guilty of the crime of grossly negligent operation and shall be punished as hereinafter provided.

67-7017.NEGLIGENT OPERATION. It shall be unlawful for any person to operate any vessel on the waters of the state of Idaho in a careless or heedless manner so as to be indifferent to any person or property of other persons, or at a rate of speed greater than will permit him in the exercise of reasonable care to bring the vessel to a stop within the assured clear distance ahead, and whosoever shall do so is guilty of the crime of negligent operation and shall be punished as hereinafter provided.

67-7018.UNLICENSED COMMERCIAL VESSELS. It shall be unlawful for any person to operate, or to permit the operation of any commercial vessel on the waters of the state of Idaho unless the same is currently inspected and licensed as set forth in Title 46, United States Code, sections 362, 375, 390-392, 399, 404, 416, 435 and 451, as revised.

67-7019.SPEED. It shall be unlawful for any person to operate a vessel on the waters of the state of Idaho at a speed or under conditions that cause any damage to or affects the safety of other vessels, docks, shoreline installations or any other property or person.

67-7020.INCAPACITY OF OPERATOR. It shall be unlawful for the owner of any vessel or any person having such in charge or in his control to authorize or knowingly permit the same to be operated on the waters of the state of Idaho by any person who by reason of age, physical or mental disability is incapable of operating a vessel under the prevailing circumstances.

67-7021.DIVERS' WARNING. It shall be unlawful for any person to operate or permit the operation of any vessel on the waters of the state of Idaho within one hundred (100) feet of the display of any recognized "diver down" flag or of the international code flag A or Alpha and all vessels approaching such a flag shall do so at reduced speed.

67-7022.OVERLOADING. It shall be unlawful for any person to operate any vessel loaded with passengers or cargo beyond its safe carrying capacity taking into consideration weather and other existing operating

conditions. It is also unlawful for any vessel to exceed the capacity established by a capacity plate required in this chapter.

67-7023.OVERPOWERING. It shall be unlawful for any person to operate any vessel with any motor or other propulsion machinery beyond its safe power capacity taking into consideration the type and construction of the vessel and other existing operating conditions. It is also unlawful for any vessel to exceed the capacity established by a capacity plate required in this chapter.

67-7024. WATER SKIING. (1) It shall be unlawful for the operator of any vessel having in tow or otherwise assisting a person on water skis, aquaplane or similar contrivance to operate or propel the same upon or above any waters of the state of Idaho unless that vessel shall be occupied by at least one (1) other competent person who shall act as an observer. This subsection shall not apply to vessels used by representatives of duly constituted water ski schools in the giving of instruction, or to vessels used in duly authorized water ski tournaments, competitions, expositions or trials.

(2) Vessels operating within a regulation legal and permitted slalom course and that are equipped with a rear view wide angle mirror are exempt from the requirement of having at least one (1) other competent person in the boat acting as an observer as provided in subsection (1) of this section. The size of the mirror must be no less than four (4) inches from bottom to top and across from side to side. It shall be mounted firmly to give the operator a full, complete view beyond the rear of the vessel at all times.

(3) No vessel shall have in tow or shall otherwise be assisting a person on water skis, aquaplane or similar contrivance from the period of one (1) hour after sunset to one (1) hour prior to sunrise. This subsection shall not apply to vessels used in duly authorized water ski tournaments, competitions, expositions or trials.

(4) All vessels having in tow or otherwise assisting a person on water skis, aquaplane or similar contrivance shall be operated in a careful and prudent manner and at a reasonable distance from persons and property so as not to endanger the life or property of any person or create excessive wake.

(5) No person shall operate or manipulate any vessel's attached towrope or other device by which the direction or location of water skis, aquaplane or similar device may be affected or controlled in such a way as to cause the same or any person thereon to collide with or strike against any person or object other than a jumping ramp or in conjunction with skiing over a slalom course.

67-7025.INTERFERENCE WITH NAVIGATION. It shall be unlawful for any person to operate any vessel on the water of this state in a manner that shall unreasonably or unnecessarily interfere with other vessels or with free and proper navigation on the waterways of the state. Violation of the rules of the road shall constitute interference.

67-7026.RESTRICTED AREAS. It shall be unlawful for any person to operate a vessel on the water of this state in any area which has been clearly marked in accordance with, and as authorized by the laws of this state, by buoys or some other distinguishing device as a bathing, swimming or other restricted area. This section shall not apply in the case of an emergency or to patrol or rescue vessels.

67-7027. COLLISIONS, ACCIDENTS AND CASUALTIES -- REPORTS. (1) It shall be unlawful for the operator of any vessel on the water of this state to fail to report any accident or casualty occasioned by the operation of a vessel and as herein provided.

(2) It shall be the duty of the operator of any vessel involved in a collision, accident or other casualty, so far as he can do so without serious danger to his own vessel, crew, passengers and guests to render aid to other persons affected by the collision, accident or other casualty and also to give his name, address and identification of his vessel in writing to any person injured and to the owner of any property damaged in the collision, accident or other casualty.

(3) It shall be the duty of the operator of any vessel involved in a collision, accident or other casualty resulting in death or injury to a person or damage to property in excess of one thousand five hundred dollars ($1,500):

(a) To immediately, by the quickest means of communication, give notice of the accident to the sheriff of the county in which the accident occurred; and

(b) To file with the sheriff of the county in which the accident occurred, a boating accident report within forty-eight (48) hours of the occurrence if a person dies within twenty-four (24) hours of the occurrence, or in the

case of an incapacitating injury or if a person disappears from the vessel. A report shall be filed within ten (10) days of the occurrence or death if an earlier report is not required by this paragraph. The report shall be made on forms provided by the department, but shall not be referred to in any way as evidence in any judicial proceeding. A copy of such report shall also be readily transmitted by the sheriff to the designated state boating safety coordinator.

(4) If the operator of the vessel involved in a collision, accident, or other casualty is incapacitated, and there is another person in the vessel at the time of the accident capable of giving immediate notice of an accident as required herein, the person shall give or cause to be given the notice not given by the operator.

(5) If the operator of the vessel involved in a collision, accident, or other casualty is incapacitated, the investigating law enforcement officer shall file the required form as prescribed by the director.

67-7028.ENFORCEMENT. The sheriffs and deputy sheriffs of the respective counties shall be primarily responsible for the enforcement of this chapter and in the exercise of their authority may stop and board any vessel subject to law.

67-7029.AGENTS OF THE DEPARTMENT. (1) The assessors of various counties of the state shall be agents of the department and shall perform such duties as are prescribed by law.

(2) The department may authorize any person to act as agent for the issuance of certificates of registration. In the event a person accepts such authorization, he shall be assigned a block of numbers and certificates, which upon issuance in conformity with law and with any rules of the department shall be valid as if issued directly by an assessor.

67-7030.REGATTAS, RACES, MARINE EVENTS, TOURNAMENTS AND EXHIBITIONS. (1) The sheriff in each county may authorize the holding of regattas, marine events, races, tournaments or exhibitions on any waters of this state located within the county. The department may adopt rules and regulations concerning the safety of vessels and persons.

(2) Whenever a regatta, race, tournament, marine event or exhibition is proposed to be held, the person in charge shall, at least thirty (30) days prior thereto, file an application for permission to hold an event with the sheriff in the county of the proposed event, and a copy of the application shall be readily transmitted by the sheriff to the designated state boating safety coordinator.

(3) The application shall set forth the date, time and location where the event is proposed to be held, together with the following information:

(a) The name and address of the sponsoring organization.
(b) The name, address and telephone number of the person or persons in charge of the event.
(c) The nature and purpose of the event.
(d) Information as to general public interest.
(e) Estimated number and type of vessels participating in the event.
(f) Estimated number and types of spectator vessels.
(g) Number of vessels being furnished by sponsoring organizations to patrol the event.
(h) A time schedule and description of events.
(i) A section of a chart or scale drawing showing the boundaries of the event, various watercourses or areas to be used by the participants, officials and spectator vessels.

(4) The provisions of this section shall not be exclusive with respect to waters of this state over which jurisdiction is shared with the United States and shall not exempt any person from compliance with applicable federal law or regulation.

(5) Competitors in any race, regatta or trial or other marine event authorized by a sheriff shall be exempt from the provisions of law with regard to speed while on an authorized racing course and from provisions of this chapter concerning equipment, noise and numbering. These exemptions are exclusive and shall apply only while an operator of a vessel is engaged in an authorized race, regatta or trial.

(6) It shall be unlawful for any person to conduct any regatta, marine event, race, tournament or exhibition on the waters of the state of Idaho unless he shall have had a marine event permit issued to him as provided by law.

67-7031.MARKING OF WATER AREAS -- PROCEDURES -- LOCAL RULES. (1) The department may make or adopt appropriate rules for the marking of the water areas in this state through the placement of aids to navigation and regulatory markers. Such rules shall establish a marking system of aids to navigation prescribed by the United States Coast Guard and shall give due regard to the system of uniform waterway markers approved by the advisory panel of state officials to the merchant marine council of the United States

Coast Guard. No city, county, other political subdivision or other person shall mark the waters of this state in any manner in conflict with the marking system prescribed by the department or without the specific authority of the department.

(2) The provisions of this chapter shall govern the operation, equipment, numbering and all other matters relating thereto whenever any vessel shall be operated on the waters of this state or when any activity regulated by this chapter shall take place thereon. Nothing in this chapter shall be construed to prevent the adoption of any ordinance or local law relating to operation and equipment of vessels, so long as such ordinances are not in conflict with the provisions of law.

(3) Any political subdivision of the state of Idaho may at any time, but only after sufficient public notice is given, adopt local ordinances with reference to the operation of vessels on any waters within its territorial limits or with reference to swimming within areas of intense or hazardous vessel traffic, provided the ordinances are intended to promote or protect the health, safety and general welfare of its citizenry.

(4) Any political subdivision of the state of Idaho may at any time, but only after sufficient public notice is given, adopt ordinances which establish operational zones for personal watercraft on any waters within its territorial limits. Personal watercraft operational zone designations are limited to:

(a) No wake or less than five (5) miles per hour;
(b) Personal watercraft only;
(c) No personal watercraft allowed; or
(d) Distance from shoreline.

67-7032.OWNER'S RESPONSIBILITY -- PRESUMPTION OF CONSENT. (1) The owner of the vessel shall be liable for any injury or damage occasioned by the negligent operation of it, whether the negligence consists of a violation of the provisions of law, or in the failure to observe ordinary care in the operation as the rules of the road require. It shall be presumed a vessel is being operated with the knowledge and consent of the owner if, at the time of the injury or damage, it is under the control of the owner's spouse, father, mother, brother, sister, son, or daughter, or other immediate member of the family. The owner shall not otherwise be liable, however, unless the vessel is being used with his consent, either expressed or implied.

(2) Nothing contained herein shall be construed to relieve any other person from any liability which he would have otherwise had, but nothing contained herein shall be construed to authorize or permit any recovery in excess of injury or damage actually incurred.

(3) Nothing contained herein shall deprive the owner of any vessel of any of the rights, limitations or exemptions from liability afforded such owner under any federal statutes.

67-7033.PENALTIES. (1) Unless otherwise specifically provided, any person who shall violate any of the provisions of this chapter or any rule promulgated by the department pursuant to this chapter shall be guilty of an infraction and be punished as provided in section 18-111, Idaho Code.

(2) Any person who shall be convicted of any second or subsequent violation of any of the provisions of law in addition to any other penalties authorized herein shall be required to attend and successfully complete a course on safe boating approved by the state boating law administrator and may, at the discretion of the court, be refused the privilege of operating any vessel on any of the waters of this state for a period not to exceed two (2) years.

(3) Any person who shall operate any vessel during the period when he has been denied the privilege to so operate by virtue of subsection (2) of this section, shall be guilty of a misdemeanor, and upon conviction, shall be punished by a fine of not more than three hundred dollars ($300), or by imprisonment of not more than thirty (30) days, or by both such fine and imprisonment.

(4) Any manufacturer who shall violate the provisions of this chapter with respect to the obligation for the installation of capacity of certification plates shall be guilty of an infraction, and upon being found to have committed the infraction, shall be punished as provided in section 18-111, Idaho Code, and each failure to affix a capacity or certification plate as provided in this chapter shall constitute a separate offense for each vessel with respect to which the failure occurs.

(5) Any person who pleads guilty to or is found guilty of violating the provisions of section 67-7016, 67-7017, 67-7025, 67-7026 or 67-7027, Idaho Code, shall be guilty of a misdemeanor and may be fined not more than three hundred dollars ($300), imprisoned for a period not to exceed thirty (30) days, or by both such fine and imprisonment.

(6) Any person who pleads guilty to or is found guilty of violating the provisions of section 67-7034, Idaho Code, shall be guilty of a misdemeanor and:

(a) May be fined an amount not to exceed one thousand dollars ($1,000);
(b) May be imprisoned for a period not to exceed six (6) months; and

(c) Shall be required to attend and successfully complete a course on safe boating approved by the designated state boating law administrator.

67-7034.PERSONS UNDER THE INFLUENCE OF ALCOHOL, DRUGS OR ANY OTHER INTOXICATING SUBSTANCES.
(1) (a) It is unlawful for any person who is under the influence of alcohol, drugs or any other intoxicating substances, or who has an alcohol concentration of 0.08, as defined in subsection (5) of this section, or more, as shown by analysis of his blood, urine, breath, or other bodily substance, to operate or be in actual physical control of a vessel on the waters of the state of Idaho.
(b) It is unlawful for any person under twenty-one (21) years of age who has an alcohol concentration of at least 0.02 but less than 0.10, as defined in subsection (5) of this section, to operate or be in actual physical control of a vessel on the waters of the state.

(2) Any person having an alcohol concentration of less than 0.08, as defined in subsection (5) of this section, as shown by analysis of his blood, urine, breath, or other bodily substance, by a test requested by an authorized law enforcement officer shall not be prosecuted for operating under the influence of alcohol, except as provided in subsection (1)(a) and subsection (3) of this section. Any person who does not take a test to determine alcohol concentration or whose test result is determined by the court to be unreliable or inadmissible against him, may be prosecuted for operating or being in actual physical control of a vessel while under the influence of alcohol, drugs, or any other intoxicating substances, or other competent evidence.

(3) If the results of the test requested by an authorized law enforcement officer show a person's alcohol concentration of less than 0.08, as defined in subsection (5) of this section, such fact may be considered with other competent evidence of drug use other than alcohol in determining the guilt or innocence of the defendant. This subsection does not preclude prosecution for alcohol intoxication for persons described in subsection (1)(b) of this section.

(4) Persons authorized to withdraw blood for the purposes of determining content of alcohol or other intoxicating substances are those persons authorized in section 18-8003, Idaho Code. Immunity from liability in any civil proceeding for specified causes of action shall be extended to personnel as provided in section 18-8002, Idaho Code.

(5) For purposes of this chapter, an evidentiary test for alcohol concentration is a determination of the percent by weight of alcohol in blood and shall be based upon a formula of grams of alcohol per one hundred (100) cubic centimeters of blood, per two hundred ten (210) liters of breath or sixty-seven (67) milliliters of urine. Analysis of blood, urine or breath for the purpose of determining the blood alcohol concentration shall be performed by a laboratory operated by the Idaho state police or by a laboratory approved by the Idaho state police under the provisions of approval and certification standards to be set by that department, or by any other method approved by the Idaho state police. Notwithstanding any other provision of law or rule of court, the results of any test for alcohol concentration and records relating to calibration, approval, certification or quality control performed by a laboratory operated or approved by the Idaho state police or by any other method approved by the Idaho state police shall be admissible in any proceeding in this state without the necessity of producing a witness to establish the reliability of the testing procedure for examination.

(6) It is unlawful for any person who is an habitual user of, or under the influence of any narcotic drug, or who is under the influence of any other drug or any combination of alcohol and any drug to a degree which renders him incapable of safely operating a vessel to operate or be in actual physical control of a vessel on the waters of the state of Idaho. The fact that any person charged with a violation of the provisions of this subsection is or has been entitled to use such drug under the laws of this state shall not constitute a defense against any charge of a violation of the provisions of this subsection.

(7) Notwithstanding any other provision of law, any evidence of conviction under this section shall be admissible in any civil action for damages resulting from the occurrence. A conviction for the purposes of this section means that the person has pled guilty or has been found guilty, notwithstanding the form of the judgment or withheld judgment.

67-7035.AGGRAVATED OPERATING WHILE UNDER THE INFLUENCE OF ALCOHOL, DRUGS OR ANY OTHER INTOXICATING SUBSTANCES. (1) Any person causing great bodily harm, permanent disability or permanent disfigurement to any person other than himself in committing a violation of the provisions of section 67-7034, Idaho Code, is guilty of a felony, and upon conviction:
(a) Shall be sentenced to the state board of correction for not to exceed five (5) years, provided that notwithstanding the provisions of section 19-2601, Idaho Code, should the court impose any sentence other than incarceration in the state penitentiary, the defendant shall be sentenced to the county jail for a

mandatory minimum period of not less than thirty (30) days; and further provided that notwithstanding the provisions of section 18-111, Idaho Code, a conviction under this section shall be deemed a felony;
(b) May be fined an amount not to exceed five thousand dollars ($5,000);
(c) Shall have his privileges to operate a vessel suspended by the court for a mandatory minimum period of one (1) year after release from imprisonment, and may have his privileges to operate a vessel suspended by the court for not to exceed two (2) years after release from imprisonment, during which time he shall have absolutely no privileges of any kind to operate a vessel; and
(d) Shall, when appropriate, be ordered by the court to pay restitution.
(2) Notwithstanding any other provision of law, any evidence of conviction under this section shall be admissible in any civil action for damages resulting from the occurrence. A conviction for the purposes of this section means that the person has pled guilty or has been found guilty, notwithstanding the form of the judgment or withheld judgment.

67-7036.TESTING BLOOD OF PERSONS KILLED IN VESSEL ACCIDENTS. The director of the Idaho state police, jointly with the various county coroners, shall provide a system and procedure whereby all coroners in the state of Idaho shall obtain blood samples from all vessel operators who have died as a result of and contemporaneously with an accident involving a vessel.

All investigating sheriffs, deputy sheriffs, or police officers shall report such fatalities to the county coroner or follow the procedure established by the joint action of the director of the Idaho state police and the various coroners.

The blood sample, or result of blood testing, with such information as may be required, will be delivered to the director of the Idaho state police or his designee. Upon receipt of such sample the director will cause such tests as may be required to determine the amount of alcohol, narcotics and dangerous drugs contained in such sample.

The results of such tests shall be used exclusively for statistical purposes and the sample shall never be identified with the name of the deceased. Any person releasing or making public such information other than as herein prescribed, shall be guilty of a misdemeanor.

67-7037.TEST OF OPERATOR FOR ALCOHOL CONCENTRATION, PRESENCE OF DRUGS OR OTHER INTOXICATING SUBSTANCES. (1) Any person who operates or is in actual physical control of a vessel on the waters of the state of Idaho shall be deemed to have given his consent to evidentiary testing for concentration of alcohol, as defined in section 67-7034, Idaho Code, and to have given his consent to evidentiary testing for the presence of drugs or other intoxicating substances, provided that such testing is administered at the request of a peace officer having reasonable grounds to believe that person has been operating or in actual physical control of a vessel in violation of the provisions of section 67-7034, Idaho Code, or section 67-7035, Idaho Code.

(2) Such person shall not have the right to consult with an attorney before submitting to such evidentiary testing.

(3) At the time evidentiary testing for concentration of alcohol, or for the presence of drugs or other intoxicating substances is requested, the person shall be informed that if he refuses to submit to or if he fails to complete evidentiary testing:
(a) He is subject to a civil penalty of two hundred dollars ($200) for refusing to take the test;
(b) He has the right to request a hearing within seven (7) days to show cause why he refused to submit to, or complete evidentiary testing;
(c) If he does not request a hearing or does not prevail at the hearing, the court shall sustain the civil penalty; and
(d) After submitting to the evidentiary testing he may, when practicable, at his own expense, have additional tests made by a person of his own choosing.

(4) After submitting to evidentiary testing at the request of the peace officer, he may, when practicable, at his own expense, have additional tests made by a person of his own choosing. The failure or inability to obtain an additional test or tests by a person shall not preclude the admission of results of evidentiary testing for alcohol concentration or for the presence of drugs or other intoxicating substances taken at the direction of the peace officer unless the additional test was denied by the peace officer.

(5) If the operator refuses to submit to or complete evidentiary testing after the information has been given in accordance with subsection (3) of this section:
(a) A written request may be made, by the operator, within seven (7) calendar days of receipt of the complaint and summons, for a hearing before the court. If requested, the hearing must be held within thirty (30) days of the arrest unless this period is, for good cause shown, extended by the court for one (1)

additional thirty (30) day period. The hearing shall be limited to the question of why the defendant did not submit to, or complete evidentiary testing, and the burden of proof shall be upon the defendant. The court shall sustain a two hundred dollar ($200) civil penalty immediately unless it finds that the peace officer did not have legal cause to stop and request the operator to take the test or that the request violated the operator's civil rights;

(b) If a hearing is not requested by written notice to the court concerned within seven (7) calendar days, upon receipt of a sworn statement by the peace officer of the circumstances of the refusal, the court shall sustain a two hundred dollar ($200) civil penalty.

(6) A sustained civil penalty under this section shall be a civil penalty separate and apart from any other penalty imposed for a violation of other Idaho vessel statutes or for a conviction of an offense pursuant to this chapter, and may be appealed to the district court.

(7) Notwithstanding any other provision of law to the contrary, the civil penalty imposed under the provisions of this section must be paid, as ordered by the court, to the county justice fund or the county current expense fund where the incident occurred.

(8) If a person does not pay the civil penalty imposed as provided in this section within thirty (30) days of the time the penalty was imposed, the prosecuting authority representing the political subdivision where the incident occurred may petition the court in the jurisdiction where the incident occurred to file the order imposing the civil penalty as an order of the court. Once entered, the order may be enforced in the same manner as a final judgment of the court. In addition to the penalty, attorney's fees, costs, and interest may be assessed against any person who fails to pay the civil penalty.

(9) A peace officer is empowered to order evidentiary testing as provided in section 18-8002(6), Idaho Code.

(10) Any written notice required by this section shall be effective upon mailing.

(11) For the purposes of this section "evidentiary testing" shall mean a procedure or test or series of procedures or tests, including the additional test authorized in subsection (12) of this section, utilized to determine the concentration of alcohol or the presence of drugs or other intoxicating substances in a person.

(12) A person who submits to a breath test for alcohol concentration, as defined in subsection (5) of section 67-7034, Idaho Code, may also be requested to submit to a second evidentiary test of blood or urine for the purpose of determining the presence of drugs or other intoxicating substances if the peace officer has reasonable cause to believe that a person was operating under the influence of any drug or intoxicating substance or the combined influence of alcohol and any drug or intoxicating substance. The peace officer shall state in his report the facts upon which that belief is based.

67-7038.MUFFLERS AND NOISE RESTRICTIONS. (1) It shall be unlawful for any person to operate, or permit the operation of, any motorboat on the waters of the state of Idaho unless the motorboat shall at all times be equipped with a muffler or a muffler system in good working order and in constant operation and effectively installed to prevent any excessive or unusual noise.

(2) For the purposes of this section, "muffler" shall mean a sound suppression device or system designed and installed to abate the sound of exhaust gases emitted from an internal combustion engine and which prevents excessive or unusual noise.

(3) It shall be unlawful for any person to operate, or permit the operation of, any motorboat on the waters of the state of Idaho in such a manner as to exceed the following noise levels:

(a) For motorboats manufactured before January 1, 1995, a noise level of 90dB(A) when subjected to a stationary sound level test as prescribed by SAE J2005;

(b) For motorboats manufactured on or after January 1, 1995, a noise level of 88dB(A) when subjected to a stationary sound level test as prescribed by SAE J2005.

(4) It shall be unlawful for any person to operate, or permit the operation of, any motorboat on any lake or reservoir of the state of Idaho, which is more than five hundred (500) feet in width, in such a manner as to exceed a noise level of 75dB(A) measured as specified in SAE J1970. Provided, that such measurement shall not preclude a stationary sound level test as prescribed by SAE J2005.

(5) No person shall operate, or give permission for the operation of, any motorboat on the waters of the state of Idaho that is equipped with an altered muffler or a muffler cutout, bypass or other device designed or so installed so that it can be used to continually or intermittently bypass or otherwise reduce or eliminate the effectiveness of any muffler or muffler system installed in accordance with the provisions of this section.

(6) No person shall remove, alter or otherwise modify in any way a muffler or muffler system in a manner which will prevent it from being operated in accordance with the provisions of this section.

(7) Effective January 1, 1995, a person shall not manufacture, sell or offer for sale any motorboat unless it is equipped with a muffler or muffler system which does comply with subsection (3) of this section.

This subsection shall not apply to motorboats designed, manufactured and sold for the sole purpose of competing in racing events and for no other purpose.

(8) The provisions of this section shall not apply to motorboats registered and actually participating in an authorized marine event, or to a motorboat being operated by a boat or engine manufacturer for the sole purpose of testing and/or development.

(9) Any peace officer who has reason to believe that a motorboat is not in compliance with the noise levels established in this section may direct the operator of such motorboat to submit the motorboat to an on-site test to measure noise levels, with the officer on board if such officer chooses, and the operator shall comply with such request. If such motorboat exceeds the decibel levels established in this section, the officer may direct the operator to take immediate and reasonable measures to correct the violation, including returning the motorboat to a mooring and keeping the motorboat at such mooring until the violation is corrected or ceases.

67-7039.VESSEL TITLING ACT. (1) Sections 67-7039 through 67-7041, Idaho Code, shall be known and cited as the "Vessel Titling Act."

(2) The Idaho transportation department is hereby granted authority to carry out the administration of the provisions of this act and to promulgate rules to effectuate that purpose.

(3) All titling procedures for vessels shall be governed by title 49, Idaho Code. Unless otherwise provided, the term "vessel" shall be interchangeable with the term "vehicle" throughout title 49, Idaho Code, for the purposes of vessel titling and vessel dealers and salesmen licensing requirements.

(4) All vessel dealers, wholesalers, manufacturers, salesmen, distributors and representatives shall be required to be licensed as required by chapter 16, title 49, Idaho Code.

(5) All vessel dealers shall be required to procure and file a bond in the amount required in section 49-1608, Idaho Code.

67-7040.APPLICATION TO CERTAIN VESSELS. (1) The provisions of the vessel titling act shall apply to every 2000 and newer model year vessel upon transfer of ownership, and optionally to all other vessels of a model year prior to 2000, effective on and after January 1, 2000, even though vessels need not be registered under the provisions of chapter 4, title 49, Idaho Code. Vessels shall be issued a certificate of registration as provided in section 67-7008, Idaho Code.

(2) The provisions of the vessel titling act shall apply exclusively to vessels with a permanently attached mode of propulsion, such as: an inboard motor, sail, personal watercraft, or other propelling machinery, and all vessels over twelve (12) feet regardless of mode of propulsion, except: rowboats, driftboats, canoes, kayaks, inflatable vessels, rafts, barges, nonmotorized paddle vessels, sailboards, tenders, seaplanes, documented vessels, and vessels owned by the United States or a foreign state or political subdivision.

(3) Once titled, the vessel remains a titled vessel, and is subject to the requirements of chapter 5, title 49, Idaho Code.

67-7041.LIENS AND ENCUMBRANCES -- FILING -- NOTATION ON CERTIFICATE -- CONSTRUCTIVE NOTICE. No lien or encumbrance created on or after January 1, 2000, on any vessel titled under the laws of this state, shall be perfected as against creditors or subsequent purchasers or encumbrancers without notice until the holder of the lien or encumbrance, or his successor, agent or assignee, has complied with the requirements of section 49-504, Idaho Code, and has filed the title application and all required supporting documents with the Idaho transportation department or an agent of that department.

67-7050.RECIPROCAL AGREEMENTS. (1) The department is authorized to enter into bilateral, reciprocal agreements with other jurisdictions to provide mutual assistance in the disposition of vessel offenses committed by residents of one (1) jurisdiction while in the other jurisdiction.

(2) The vessel offense reciprocal agreements entered into on behalf of this state with all other states legally joining therein shall be in a form substantially as follows:

ARTICLE I -- FINDINGS AND DECLARATION OF POLICY

(1) The party states find that:

(a) The safety of their waters is materially affected by the degree of compliance with state laws and local ordinances relating to the operation of vessels.

(b) Violation of such laws or ordinances is evidence that the violator engages in conduct which is likely to endanger the safety of persons and property.

(2) It is the policy of each of the party states to promote compliance with the laws, ordinances and administrative rules and regulations relating to the operation of vessels by their operators in each of the jurisdictions where such operators operate vessels.

ARTICLE II -- DEFINITION

"State" means a state of the United States and the District of Columbia.

ARTICLE III -- CONCURRENT JURISDICTION

(1) If conduct is prohibited by two (2) adjoining party states, courts and law enforcement officers in either state who have jurisdiction over vessel offenses committed where waters form a common interstate boundary have concurrent jurisdiction to arrest, prosecute and try offenders for the prohibited conduct committed anywhere on the boundary water between the two (2) states.

(2) These reciprocal agreements will not authorize:

(a) Prosecution of any person for conduct that is unlawful in the state where it was committed, but lawful in the other party state.

(b) A prohibited conduct by the party state.

ARTICLE IV -- CONSTRUCTION AND SEVERABILITY

These reciprocal agreements shall be liberally construed so as to effectuate the purposes thereof. The provisions of these reciprocal agreements shall be severable and if any phrase, clause, sentence or provision of these reciprocal agreements is declared to be contrary to the constitution of any party state or of the United States or the applicability thereof to any government, agency, person or circumstance is held invalid, the validity of the remainder of these reciprocal agreements and the applicability thereof to any government, agency, person or circumstance shall not be affected thereby. If the reciprocal agreements shall be held contrary to the constitution of any state party thereto, the reciprocal agreements shall remain in full force and effect as to the remaining states and in full force and effect as to the state affected as to all severable matters.

67-7077.OPERATION OF VESSELS. It shall be unlawful for any person to operate any vessel on the water of this state:

(a) In a negligent manner as prescribed in section 67-7017, Idaho Code, while within one hundred (100) feet of another vessel; or

(b) At a speed greater than no wake or five (5) miles per hour while within one hundred (100) feet of a dock, swimmer or other person in the water, except when safely pulling a water skier from a dock, or when safely dropping off a water skier at or near a dock, or when the swimmer or other person in the water is the vessel's water skier. Except when dropping off a skier at or near a dock all efforts shall be made to reasonably minimize the time and distance the vessel shall travel inside the one hundred (100) foot zone while operating at speeds greater than no wake or five (5) miles per hour.

67-7078.PERSONAL WATERCRAFT LIVERIES. (1) Any person who offers a personal watercraft for lease, hire or rent shall:

(a) Provide a Coast Guard approved Type I, II, III or V personal flotation device and any other required safety equipment to all persons who lease, hire or rent the personal watercraft at no additional charge;

(b) Display a safety information decal provided by the department describing laws, rules and safety measures pertaining to personal watercraft in a location clearly visible from the operator's position on each personal watercraft leased, hired or rented;

(c) Instruct each person that will operate the personal watercraft during the rental or lease period on the laws, rules and safe operation of the personal watercraft as prescribed by the department;

(d) Provide to the person leasing, hiring or renting the personal watercraft a written copy of acknowledgement of instruction on forms provided by the department. Each copy must contain the names and physical description of all persons eligible to operate the personal watercraft during the rental or lease period.

(2) It is unlawful for any person to operate a personal watercraft which is being rented, hired or leased before being instructed on the laws, rules and safe operation of personal watercraft by the lessor as prescribed in this chapter.

(3) Any person operating a personal watercraft which is leased, hired or rented must carry on board a written copy of acknowledgement of instruction whenever the personal watercraft is in operation.

(4) Any person violating the provisions of this section shall be guilty of an infraction and punishable as provided in section 18-113A, Idaho Code.

TITLE 67
STATE GOVERNMENT AND STATE AFFAIRS
CHAPTER 71
RECREATIONAL ACTIVITIES

67-7101.DEFINITIONS. In this chapter:

(1) "All-terrain vehicle (ATV)" means any recreation vehicle with three (3) or more tires, under nine hundred (900) pounds and fifty (50) inches or less in width, having a wheelbase of sixty-one (61) inches or less, has handlebar steering and a seat designed to be straddled by the operator.

(2) "Board" means the park and recreation board created under authority of section 67-4221, Idaho Code.

(3) "Bona fide snowmobile program" means services or facilities as approved by the department that will benefit snowmobilers such as snowmobile trail grooming, plowing and maintaining snowmobile parking areas and facilities, and trail signing.

(4) "Dealer" means any person who engages in the retail sales of or rental of snowmobiles, motorbikes, utility type vehicles or all-terrain vehicles.

(5) "Department" means the Idaho department of parks and recreation.

(6) "Designated parking area" means an area located, constructed, maintained, and signed with the approval of the land manager or owner.

(7) "Director" means the director of the department of parks and recreation.

(8) "Highway." (See section 40-109, Idaho Code, but excepting public roadway as defined in this section)

(9) "Motorbike" means any self-propelled two (2) wheeled motorcycle or motor-driven cycle, excluding tractor, designed for or capable of traveling off developed roadways and highways and also referred to as trailbikes, enduro bikes, trials bikes, motocross bikes or dual purpose motorcycles.

(10) "Off-highway vehicle" means an all-terrain vehicle, motorbike, specialty off-highway vehicle or utility type vehicle as defined in this section.

(11) "Operator" means any person who is in physical control of a motorbike, all-terrain vehicle, utility type vehicle, specialty off-highway vehicle or snowmobile.

(12) "Owner" means every person holding record title to a motorbike, all-terrain vehicle, utility type vehicle, specialty off-highway vehicle or snowmobile and entitled to the use or possession thereof, other than a lienholder or other person having a security interest only.

(13) "Person" means an individual, partnership, association, corporation, or any other body or group of persons, whether incorporated or not, and regardless of the degree of formal organization.

(14) "Public roadway" means all portions of any highway which are controlled by an authority other than the Idaho transportation department.

(15) "Snowmobile" means any self-propelled vehicle under one thousand (1,000) pounds unladened gross weight, designed primarily for travel on snow or ice or over natural terrain, which may be steered by tracks, skis, or runners.

(16) "Specialty off-highway vehicle" means any vehicle manufactured, designed or constructed exclusively for off-highway operation that does not fit the definition of an all-terrain vehicle, utility type vehicle or motorbike as defined in this section. The vehicle classification provided for in this subsection shall become effective on January 1, 2010.

(17) "Utility type vehicle (UTV)" means any recreational motor vehicle other than an ATV, motorbike or snowmobile as defined in this section, designed for and capable of travel over designated roads, traveling on four (4) or more tires, maximum width less than seventy-four (74) inches, maximum weight less than two thousand (2,000) pounds, and having a wheelbase of one hundred ten (110) inches or less. A utility type vehicle must have a minimum width of fifty (50) inches, a minimum weight of at least nine hundred (900) pounds or a wheelbase of over sixty-one (61) inches. Utility type vehicle does not include golf carts, vehicles specially designed to carry a disabled person, implements of husbandry as defined in section 49-110(2), Idaho Code, or vehicles otherwise registered under title 49, Idaho Code. A Utility type vehicle (UTV) also means a recreational off-highway vehicle or ROV.

(18) "Vendor" means any entity authorized by the department to sell recreational registrations.

(19) "Winter recreational parking locations" means designated parking areas established and maintained with funds acquired from the cross-country skiing account.

67-7102.REQUIREMENT THAT SNOWMOBILE BE NUMBERED. Except as otherwise provided, no snowmobile shall be operated within the jurisdiction of the state of Idaho unless numbered as provided in this chapter.

67-7103.APPLICATION FOR NUMBER -- ATTACHMENT OF NUMBER -- CERTIFICATE -- APPLICATION FOR TRANSFER OF CERTIFICATE -- TRANSFER OF CERTIFICATE FEE -- TEMPORARY NUMBER -- FEES. (1) On or before November 1 of each year the owner of each snowmobile requiring numbering by the state of Idaho shall file an application for number with the department on forms approved by it. The application shall be signed by the owner and shall, except as provided in subsection (7) of this section, be accompanied by a fee of thirty-one dollars ($31.00). Upon receipt of the application the department shall issue to the applicant a certificate of number stating the number assigned to the snowmobile and the name and address of the owner. The owner shall attach to the snowmobile the identification number in a manner as may be prescribed by rules of the department. The number shall be located on the right and left side of the cowling of the snowmobile and shall be completely visible and shall be maintained in legible condition. The certificate of number shall be pocket size and shall be available at all times for inspection on the snowmobile for which issued, wherever the snowmobile is in operation.

(2) The department may issue any certificate of number directly or may authorize any persons to act as vendor for the issuance. In the event a person accepts the authorization, he may be assigned a block of numbers and certificates which upon issue, in conformity with this chapter and with any rules of the department, shall be valid as if issued directly by the department.

(3) All records of the department made or kept pursuant to this section shall be public records.

(4) Each snowmobile must be registered before it leaves the premises at the time of sale from any retail snowmobile dealer.

(5) The purchaser of a snowmobile shall, within fifteen (15) days immediately after acquisition, make application to the department for transfer to him of the certificate of number issued to the snowmobile, giving his name, address and the number of the snowmobile and shall at the same time pay to the department a fee of three dollars ($3.00). Upon receipt of the application and fee, the department shall transfer the certificate of number issued for the snowmobile to the new owner or owners. Unless the application is made and fee paid within fifteen (15) days, the snowmobile shall be considered to be without a certificate of number and it shall be unlawful for any person to operate that snowmobile until the certificate is issued.

(6) No number other than the number issued to a snowmobile pursuant to this chapter shall be painted, attached, or otherwise displayed on the snowmobile, except a temporary number may be attached to identify a snowmobile for the purpose of racing or other sporting events.

(7) Resident and nonresident owners of snowmobiles used for rental purposes shall purchase certificates of number for sixty-one dollars ($61.00) and the certificates of number shall be displayed on the machine at all times.

67-7104.NONRESIDENT SNOWMOBILE USER CERTIFICATE REQUIRED. The owner of a nonresident, noncommercial snowmobile shall not be required to comply with the registration requirements of the state of Idaho, but shall be required to obtain a nonresident snowmobile user certificate. A fee of thirty-one dollars ($31.00) shall be imposed for the issuance of a nonresident snowmobile user certificate. The certificate of number shall be displayed in the same manner as provided in section 67-7103, Idaho Code. Such certificates shall be valid beginning November 1 through October 31 of the following year. Issuance and administration of nonresident snowmobile user certificates shall be conducted in the same manner as provided in section 67-7103, Idaho Code, for numbering of snowmobiles.

(1) For purposes of this section, "nonresident" shall be as defined in section 36-202, Idaho Code.

(2) In the absence of a bona fide program in the area or upon the request of the bona fide county snowmobile advisory committee of the nearest affected county in Idaho, the requirements for the nonresident certificate may be waived by the parks and recreation board on specific trails where the snowmobile trail grooming is solely supported by a state other than Idaho.

67-7105.GOVERNMENT OWNERSHIP. Certificate of number and registration portions of this chapter shall not apply to snowmobiles, all-terrain vehicles, utility type vehicles, specialty off-highway vehicles and motorbikes owned and operated by the federal government, a state government or a subdivision of it.

67-7106.DISTRIBUTION OF MONEYS COLLECTED -- COUNTY SNOWMOBILE FUND -- STATE SNOWMOBILE FUND -- STATE SNOWMOBILE SEARCH AND RESCUE FUND. (1) Each vendor shall not later than the fifteenth day of each month remit all moneys collected under the provisions of sections 67-7103 and 67-7104, Idaho Code, to the state treasurer for credit to the state snowmobile fund, established in the dedicated fund, to be administered by the director, except that one dollar ($1.00) from each snowmobile certificate of number fee, one dollar ($1.00) from each rental certificate of number fee, and one dollar ($1.00)

from each nonresident snowmobile user certificate issued by the vendor shall be credited by the state treasurer to the state snowmobile search and rescue fund created in section 67-2913A, Idaho Code.

(2) Each county with a bona fide snowmobile program shall be entitled to receive from the department eighty-five percent (85%) of the moneys generated for that county during that registration period. Counties with a bona fide snowmobile program may use up to fifteen percent (15%) of their county snowmobile moneys upon recommendation by their county snowmobile advisory committee for snowmobile law enforcement purposes.

(3) Up to fifteen percent (15%) of the revenue generated from snowmobile registrations each year may be used by the department to defray administrative costs. Any moneys unused at the end of the fiscal year shall be returned to the state treasurer for deposit in the state snowmobile fund.

(4) Vendors shall be entitled to charge an additional one dollar and fifty cents ($1.50) handling fee per registration for the distribution of certificates of number. Handling fees collected by the department shall be deposited to the state snowmobile fund.

(5) For those registrations not designated to a bona fide county snowmobile program, the moneys generated shall be deposited to the state snowmobile fund, and such fund shall be available to the department for snowmobile-related expenses.

67-7107.COUNTY ADVISORY COMMITTEE. The county commissioners of any county may appoint snowmobile advisory committees to serve without salaries and wages in an advisory capacity relating to the establishment and maintenance of parking and unloading areas on public and private property, and the expenditure of moneys deposited in the county snowmobile fund; and to serve at the pleasure of the county commissioners. The persons selected shall be active snowmobilers representing snowmobile clubs, organizations, or merchants engaged in the sale or rental of snowmobiles, or be a member of the general public actively engaged in the sport of snowmobiling.

The board of county commissioners is hereby authorized, upon advisement of the special advisory committee, to use and expend the special fund created in section 67-7106, Idaho Code, outside the county.

67-7108.PROHIBITION AGAINST NUMBERING BY POLITICAL SUBDIVISIONS. The provisions of this chapter shall govern the numbering and registration of snowmobiles operated in this state. All political subdivisions of the state are expressly prohibited from numbering or registering snowmobiles in any respect.

67-7109.PROHIBITION AGAINST HIGHWAY OPERATION -- EXCEPTIONS. No person shall operate a snowmobile upon any highway or public roadway in this state, with the following exceptions:

(1) Properly numbered snowmobiles may cross, as directly as possible after a full and complete stop, highways and public roadways, except controlled access highways, provided that the crossing can be made in safety and that it does not interfere with the free movement of vehicular traffic approaching from either direction on the highway or public roadway. It shall be the responsibility of the operator of the snowmobile to yield the right-of-way to all vehicular traffic upon any highway or public roadway before crossing.

(2) Loading or unloading shall be done without causing a hazard to vehicular traffic approaching from either direction on a highway or public roadway. Loading or unloading shall be accomplished with regard to safety, at the nearest possible point to the area of operation.

(3) The prohibition against operating snowmobiles upon highways and public roadways shall not apply to any highway or public roadway drifted or covered with snow to an extent that travel on it by other motor vehicles is impractical or impossible.

(4) Snowmobiles may be operated on that portion of a highway or public roadway right-of-way that is not maintained or utilized for the operation of conventional motor vehicles.

(5) Local authorities may, by ordinance, specifically designate public roadways upon which snowmobiles may be operated.

67-7110.RESTRICTIONS. It shall be unlawful for any person to drive or operate any snowmobile:

(1) At a rate of speed greater than reasonable and prudent under the existing conditions.

(2) In a negligent manner so as to endanger the person or property of another, or to cause injury or damage to either, or to harass, chase or annoy any wild game animals or birds or domestic animals.

(3) Without a lighted headlight and taillight between the hours of dusk and dawn, or when upon or crossing any public roadway or highway, or when otherwise required for the safety of others.

(4) Without an adequate braking device which may be operated by either hand or foot.

(5) Without an adequate muffler, except when used in conjunction with public racing events.

(6) Upon a public roadway or highway without a valid motor vehicle operator's license, unless the public roadway or highway is closed to other motor vehicle travel.

67-7111.ACCIDENT RESULTING IN PERSONAL INJURIES OR PROPERTY DAMAGE. The operator of any snowmobile involved in any accident resulting in injuries to or death to any person or property damage in the estimated amount of two hundred dollars ($200) or more, or a person acting for the operator, or the owner of the snowmobile having knowledge of the accident should the operator of the snowmobile be unknown, shall immediately notify a proper law enforcement agency of the facts relating to the accident and within five (5) days file a report of the circumstances with the department on forms prescribed by the department. For any accident occurring on a highway or public roadway the owner, the operator, or both shall be subject to the provisions of section 49-2417, Idaho Code.

67-7112.GROOMED SNOWMOBILE TRAILS. Any all-terrain vehicle operating on groomed snowmobile trails during the winter snowmobiling season when the trails are groomed shall be registered as a snowmobile under the provisions of section 67-7103, Idaho Code. Counties shall have the option to allow all-terrain vehicles, if registered, to use snowmobile trails in the county. No other vehicles shall operate on groomed snowmobile trails unless specifically allowed by the county. Violation of the provisions of this section shall be an infraction.

67-7113.VIOLATIONS -- ACCOUNTABLE FOR PROPERTY DAMAGE. (1) Any person who violates any provision of sections 67-7102 through section 67-7112, Idaho Code, shall be guilty of an infraction, and shall be punished by a fine of not less than ten dollars ($10.00) nor more than one hundred dollars ($100). In addition thereto the operator and/or owner of the snowmobile shall be responsible and held accountable to the owner of any lands where trees, shrubs or other property have been damaged as the result of travel over their premises.

67-7114.OPERATION UNDER THE INFLUENCE OF ALCOHOL, DRUGS OR ANY OTHER INTOXICATING SUBSTANCE. Any person driving or operating a snowmobile, motorbike, utility type vehicle, specialty off-highway vehicle or all-terrain vehicle under the influence of alcohol, drugs or any other intoxicating substance on a public roadway or highway or off-highway shall be guilty of a misdemeanor.

67-7115.WINTER RECREATIONAL PARKING PERMIT -- FEE -- FINES -- PERMITS FOR SNOWMOBILE OWNERS -- EXEMPTIONS. (1) Except as hereinafter provided, no person shall, from November 15 of any year to April 30 of the next year, park a vehicle in a winter recreational parking location unless the vehicle displays an annual or temporary parking permit. The annual permit shall be permanently affixed and the temporary permit shall be temporarily affixed on the front window of the vehicle nearest the driver's seat in such a manner that they are completely visible and shall be kept in a legible condition at all times.

(2) The fee for the annual permit and the temporary permit shall be set by the board, but shall not exceed thirty dollars ($30.00) for the annual permit or ten dollars ($10.00) for the temporary permit.

(3) The owner of any vehicle, as defined in chapter 1, title 49, Idaho Code, that violates the provisions of subsection (1) of this section has committed an infraction punishable as provided under section 18-113A, Idaho Code, and shall be punished with a fine of not less than twenty dollars ($20.00) or more than fifty dollars ($50.00). The fact that a motor vehicle which is illegally parked under the provisions of this chapter is registered or leased in the name of a person shall be considered prima facie evidence that the person was in control of the vehicle at the time of parking.

(4) Snowmobile owners, when snowmobiling, shall be allowed to park their transportation vehicles in a designated winter recreational parking area without displaying a parking permit.

(5) No parking permit shall be required under the provisions of this section for a vehicle owned and operated by the United States, any state or a political subdivision of a state, or a vehicle registered in another state, if that vehicle displays a similar cross-country skiing permit, but only to the extent that an exception or privilege is granted under the laws of that state for permit holders from this state.

67-7116.PRINTING, DISTRIBUTION AND SALE OF WINTER RECREATIONAL PARKING PERMITS. (1) The department shall print the parking permits and shall supervise the sale of the permits throughout the state.

(2) The department shall distribute and sell the permits directly or may authorize vendors under agreement according to rules and regulations of the department. The department may require that the authorized vendors shall be bonded in accordance with rules and regulations of the department. Authorized vendors will receive a stipulated commission for each permit sold.

67-7117.CROSS-COUNTRY SKIING RECREATION ACCOUNT. There is established in the state treasury an account to be known as the "cross-country skiing recreation account," into which the money specified in section 67-7118, Idaho Code, shall be deposited. The board is charged with the administration of the account for the purposes specified in section 67-7118(3), Idaho Code. All claims against the account shall be examined, audited and allowed in the same manner now or hereafter provided by law for claims against the state, except that the board is empowered to enter into agreements with the counties for the disbursement of funds to them on a project by project basis.

67-7118.DISTRIBUTION OF FEES. The moneys collected by or for the board on the sale of each winter recreational parking permit shall be allocated as follows:

(1) The authorized vendor shall be entitled to receive a commission of one dollar ($1.00) on each permit sold, which sum may be retained as compensation for the sale of the permit.

(2) Fifteen per cent (15%) shall be allotted to the department for the production of the parking permits and necessary administration expenses incurred by the department in carrying out the provisions of section 67-7115(3), Idaho Code, which moneys shall be placed in the park and recreation account.

(3) The balance shall be transmitted to the state treasurer for deposit to the credit of the cross-country skiing recreation account to be appropriated first for the reimbursement for costs incurred in the removal of snow from winter recreation parking locations. Any remaining monies may be appropriated to provide grants to public or nonprofit entities for the acquisition, lease, development and maintenance of sanitation facilities, trail marking and other facilities designed to promote the health and safety of persons engaged in cross-country skiing.

67-7119.CROSS-COUNTRY SKIING ADVISORY COMMITTEES. (1) In counties where cross-country skiing activities result in additional demands for roadside parking, the boards of county commissioners may appoint cross-country skiing committees of at least three (3) persons to serve in an advisory capacity to the commissioners on matters relating to the establishment and maintenance of winter recreational parking facilities. The persons selected shall be active cross-country skiers representing cross-country ski clubs or organizations, merchants engaged in the sale or rental of cross-country skiing equipment, cross-country skiing instructors, or members of the general public actively engaged in the sport. Where park and recreational committees already exist they may be used in lieu of the appointment of new committees if each group includes at least one (1) cross-country skier.

(2) Each county advisory committee shall hold a minimum of two (2) meetings during the cross-country skiing season, one (1) to be held prior to November 15 of each year and one (1) to be held prior to January 15 of the following year. All meetings of the committee shall be open to the public.

(3) Members of the advisory committees shall receive no compensation or expenses for their services.

67-7122.REQUIREMENTS -- REGISTRATION -- PROCEDURE. (1) On or before January 1 of each year, the owner of any all-terrain vehicle, motorbike, specialty off-highway vehicle or utility type vehicle as defined in section 67-7101, Idaho Code, or any motorcycle as defined in section 49-114, Idaho Code, used off public highways, on highways located on state lands or federal lands which are not part of the highway system of the state of Idaho or on highways as prescribed in section 49-426(3) and (4), Idaho Code, but excluding those vehicles used exclusively on private land for agricultural use or used exclusively for snow removal purposes as provided in section 49-426(2), Idaho Code, shall register that vehicle at any vendor authorized by the department. Effective January 1, 2010, a fee of twelve dollars ($12.00) shall be charged for each registration, which fee includes a one dollar and fifty cent ($1.50) fee to be retained by the vendor and the remainder of which shall be remitted to the department together with a duplicate copy of the application form, noting the number of the registration sticker issued.

(2) At the time of sale from any dealer, each motorbike, all-terrain vehicle or utility type vehicle sold to an Idaho resident, but excluding those vehicles to be used exclusively on private land for agricultural use or used exclusively for snow removal purposes as provided in section 49-426(2), Idaho Code, must be registered.

(a) Application blanks and registration stickers shall be supplied by the department and the registration sticker shall be issued to the person making application for registration.

(b) All registration stickers which are issued shall be in force through December 31 of the issued year. All registration stickers shall be renewed by the owner of the all-terrain vehicle, motorbike, specialty off-highway vehicle or utility type vehicle in the same manner provided for in the initial securing of the same or with any

vendor authorized by the department. A vendor issuing a renewal registration sticker shall retain a one dollar and fifty cent ($1.50) vendor fee and remit the remainder of the twelve dollar ($12.00) renewal registration sticker fee to the department together with a duplicate copy of the application form, noting the number of the registration sticker issued.

(c) The issued registration sticker shall be placed upon the restricted vehicle license plate of the all-terrain vehicle, motorbike or utility type vehicle, or upon the right fork of a vehicle registered pursuant to section 49-402(3), Idaho Code, or of a motorbike if used exclusively off-highway, or upon the rear fender of an all-terrain vehicle, specialty off-highway vehicle or utility type vehicle if used exclusively off-highway. The placement shall be made in such a manner that it is completely visible, does not cover the license plate numbers or letters, if licensed, and shall be kept in a legible condition at all times.

(3) For operation of a motorbike that meets the requirements specified in section 49-114(10), Idaho Code, on the public highways, the vehicle shall also be registered pursuant to the provisions of section 49-402(3), Idaho Code. A motorbike that meets the requirements specified in section 49-114(10), Idaho Code, and that is registered pursuant to section 49-402(3), Idaho Code, shall not be required to obtain a restricted license plate pursuant to section 49-402(4), Idaho Code. A motorbike, all-terrain vehicle, specialty off-highway vehicle or utility type vehicle operated exclusively off-highway or on highways located on state lands or federal lands which are not part of the highway system of the state of Idaho and that meet the registration requirements specified in this section shall not be required to obtain a restricted vehicle license plate pursuant to section 49-402(4), Idaho Code.

(4) Nonresidents shall be allowed to purchase a restricted vehicle license plate pursuant to section 49-402(4), Idaho Code, and/or a sticker for an all-terrain vehicle, motorbike or utility type vehicle.

67-7123.TRANSFER OF REGISTRATION STICKER AND RESTRICTED VEHICLE LICENSE PLATE. The purchaser of an all-terrain vehicle, utility type vehicle or motorbike, which has been previously registered pursuant to section 67-7122, Idaho Code, and issued a restricted vehicle license plate pursuant to section 49-402, Idaho Code, shall within fifteen (15) days after acquiring same, make application to the county assessor or county motor vehicle office as may be designated by the county assessor for transfer to him of the sticker of registration and restricted vehicle license plate issued to the vehicle, giving the same information as on the original application and the number of the registration sticker and restricted vehicle license plate, and shall at the same time pay a transfer fee of one dollar and fifty cents ($1.50).

67-7124.NONRESIDENT -- EXEMPTION. (1) The provisions of section 67-7122, Idaho Code, regarding registration shall not apply to any nonresident owner; provided the all-terrain vehicle, utility type vehicle, specialty off-highway vehicle or motorbike is currently and properly registered in the state of residence. Owners of an all-terrain vehicle, utility type vehicle, specialty off-highway vehicle or motorbike from states that do not have a registration requirement shall be registered in Idaho under the provisions of section 67-7122, Idaho Code, prior to operation in this state.

(2) Nonresidents with an all-terrain vehicle, utility type vehicle, specialty off-highway vehicle or motorbike registered in another state shall have the same use privileges and responsibilities as a resident of this state with a properly registered vehicle.

67-7125.NOISE ABATEMENT. (1) Except as hereinafter provided, every vehicle subject to registration under section 67-7122, Idaho Code, shall comply with the provisions of this section. Every vehicle subject to the provisions of this section shall at all times be equipped with an exhaust system in good working order and in constant operation. If the vehicle was originally equipped with a noise suppressing system or if the vehicle is required by law or regulation of this state or the federal government to have a noise suppressing system, that system shall be maintained in good working order. No person shall disconnect, modify or alter any part of that system in any manner which will amplify or increase the vehicle's noise emission above the noise limits established in subsection (3) of this section, except temporarily in order to make repairs, replacements or adjustments. No person shall operate and no owner shall cause or permit to be operated any vehicle while the vehicle's noise emission exceeds the noise limits established in subsection (3) of this section or while the vehicle's noise suppressing system is disconnected, modified or altered in violation of the provisions of this section.

(2) No person shall operate a vehicle subject to the provisions of this section unless that vehicle is equipped with a spark arrester device, affixed to the exhaust system, of a type qualified and rated by the United States forest service. The provisions of this subsection shall not apply to vehicles being operated off the highway in an organized racing or competitive event which is conducted on private land with the consent of the landowner.

(3) Any vehicle subject to the provisions of this section shall at all times be equipped with a noise

suppressing system or other device which limits noise emission to a base level of not more than ninety-six (96) decibels when measured on the "A" scale using standards and procedures established by the society of automotive engineers (SAE), specifically SAE standard J1287, June, 1988, describing a test of a stationary vehicle with sound measured twenty (20) inches and forty-five (45) degrees from the exhaust outlet, or as otherwise described. The provisions of this subsection shall not apply to vehicles being operated off the highway in an organized racing or competitive event which is conducted on private land with the consent of the landowner or on public land under permit.

(a) The department shall adopt regulations in accordance with chapter 52, title 67, Idaho Code, establishing the test procedures and instrumentation to be utilized. These procedures shall incorporate requirements for the test site environment and sound measuring equipment as set forth in SAE standard J1287, June, 1988.

(b) Instrumentation shall include but not be limited to a sound level meter meeting the type 1, type S1A, type 2, or type S2A requirements of the American national standards institute (ANSI) specification for sound level meters, S1.4-1983; a sound level calibrator, microphone wind screen, external engine speed tachometer.

(4) A showing that the noise emission level of any vehicle subject to and not otherwise exempt from the provisions of this section exceeds ninety-six (96) decibels, as described and tested in subsection (3) of this section, shall be prima facie evidence of a violation of subsection (1) of this section.

67-7126.ESTABLISHMENT OF ACCOUNT -- DISTRIBUTION OF FEES. There is established in the state treasurer's office an account to be known and designated as the "motorbike recreation account." The twelve dollar ($12.00) fee collected for off-highway vehicle registration stickers shall be allocated as follows:

(1) Vendors shall charge and retain one dollar and fifty cents ($1.50) for a handling fee;

(2) Up to fifteen percent (15%) shall be allotted to the department for administration and for the production of registration stickers, which moneys shall be placed in the motorbike recreation account. The department shall annually publish a report specifically identifying the uses of account moneys;

(3) One dollar ($1.00) shall be deposited into the off-highway vehicle law enforcement fund. Moneys in said fund shall be paid and used as follows:

(a) Sheriffs of counties with a current or an actively developing off-highway vehicle law enforcement program recognized by the department shall receive moneys from the fund based upon a formula as provided in rule promulgated by the board; and

(b) Moneys from the fund shall be used only for off-highway related law enforcement activities; and

(4) One dollar ($1.00) shall be allocated to the Idaho department of lands to provide off-highway vehicle opportunities and to repair damage directly related to off-highway vehicle use. The department of lands shall annually publish a report specifically identifying the uses of moneys allocated pursuant to this subsection; and

(5) The remaining funds shall be transmitted to the state treasurer's office for deposit to the credit of the motorbike recreation account, all such moneys to be transmitted to the state treasurer on or before the tenth day of each month.

Collection of fees for off-highway vehicle registration shall not impose any additional liability on the state of Idaho or any of its political subdivisions or upon the employees of the state and of its political subdivisions, and those entities and persons shall retain the limitations of liability provided by section 36-1604, Idaho Code, regardless of the use of such fees.

67-7127.USE OF MONEYS IN ACCOUNT. The board shall administer the motorbike recreation account. The moneys derived from this account shall be used as follows:

(1) For the securing of special leases or permits, or for the actual purchase of land under private, state or federal ownership to be used for recreational off-highway vehicle activity;

(2) For the securing, maintenance, construction or development of trails and other recreational facilities for off-highway vehicle use on state and federal lands;

(3) To finance the formulation and implementation under the board’s direction of an off the road rider education program.

(4) To acquire applicable federal matching funds.

67-7128.OFF-ROAD MOTOR VEHICLE ADVISORY COMMITTEE -- CREATION -- SELECTION -- TERM OF OFFICE -- DUTY. (1) The park and recreation board shall appoint an off-road motor vehicle advisory committee (ORMV) of nine (9) members. The membership of the advisory committee shall consist of three (3) members each from northern Idaho, southwestern Idaho, and southeastern Idaho. Two (2) members from each area shall represent the following groups: motorbikes, ATV or UTV riders and snowmobilers. One (1) member interested in ORMV projects shall be appointed from each area without regard to the recreational

activity in which that member participates and shall represent interests other than motorbike, ATV or UTV riders and snowmobilers. Each member of the advisory committee shall be chosen by the park and recreation board to serve a term of three (3) years, except that the term of the initial appointees shall commence on the date of appointment and shall be of staggered lengths. Each member of the advisory committee shall be a qualified elector of the state. Duties shall include:

(a) Representing the best interests of the ORMV users and activities which they represent in the district from which they are appointed;

(b) Advising the department as to whether proposed ORMV projects meet the needs of ORMV users in that area;

(c) Advising the department as to how funds can be used to rehabilitate areas on public or private lands and how the department can assist in the enforcement of laws and regulations governing the use of off-road vehicles in the state of Idaho;

(d) The three (3) motorbike, all-terrain vehicle or utility type vehicle representatives from the ORMV advisory committee shall advise the department on matters relating to the use of moneys in the motorbike recreation account as provided for in section 67-7127, Idaho Code.

(2) The committee shall be compensated as provided in section 59-509(f), Idaho Code, and authorized by the department.

67-7129.PENALTIES. Unless otherwise specifically provided, any violation of the provisions of this chapter or any rule promulgated by the department pursuant to this chapter, shall be an infraction and be punished as provided in section 18-111, Idaho Code.

67-7132.RULES AND REGULATIONS. The director shall adopt and enforce administrative rules and regulations under the provisions of chapter 52, title 67, Idaho Code, as necessary to carry out the provisions of this chapter.

67-7133.RESPONSIBILITY FOR ENFORCEMENT. The provisions of this chapter shall be enforced by the law enforcement personnel of the Idaho state police, the department of fish and game, employees of the department of parks and recreation authorized by the director of the Idaho state police, the sheriffs and their deputies of the various counties in the state and peace officers of each city.